INOX - IVR 670

Valvola a sfera a passaggio totale in 3 pezzi in acciaio inox AISI 316
Attacchi a saldare di testa - Flangia ISO 5211

AISI 316 stainless steel three-piece full bore ball valve
Butt welding ends - ISO 5211 mounting plate

Dreiteiliger Kugelhahn mit vollem Durchgang aus Edelstahl AISI 316
Anschlüsse mit Stumpfschweißung - Flanschplatte ISO 5211

Vanne à boisseau sphérique en trois pièces à passage intégral en acier inox AISI 316 - extremitèes à souder BW - platine ISO 5211

Трёхсоставной полнопроходной шаровой кран из нержавеющей стали AISI 316 – Соединения под приварку (головка) – фланец ISO 5211

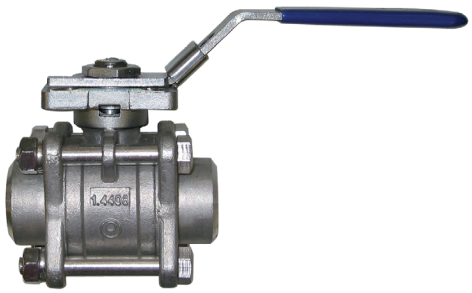

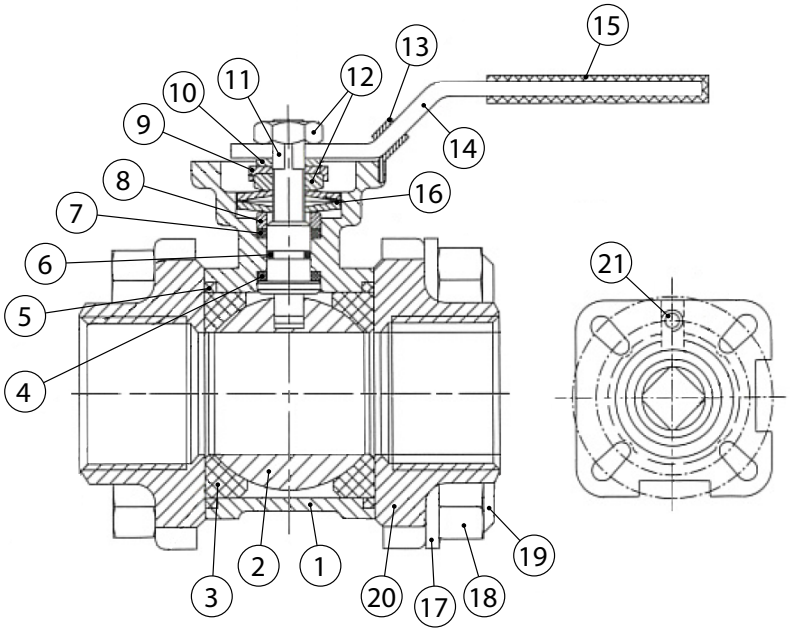

ITEM	PART NAME	MATERIAL	QTY
1	Corpo - *Body*	CF8M	1
2	Sfera - *Ball*	SS316	1
3	Seggio Sfera - *Ball Seat*	R-PTFE (15%)	2
4	Rondella - *Thrust Washer*	PTFE	1
5	Guarnizione Corpo - *Body Gasket*	PTFE	2
6	O-Ring	VITON	1
7	Guarnizione Asta - *Stem Packing*	PTFE	1
8	Anello Asta - *Stem Ring*	SS316	1
9	Dado di fermo - *Nut Stopper*	SS304	1
10	Rondella - *Plate Washer*	SS304	1
11	Asta - *Stem*	SS316	1
12	Dado - *Nut*	SS304	2
13	Dispositivo di blocco - *Lock Device*	SS304	1
14	Leva - *Handle*	SS304	1
15	Rivestimento Plastico - *Plastic Cover*	PLASTIC	1
16	Rondella - *Washer*	SS301	2
17	Rondella Molla - *Spring Washer*	SS304	4(12)
18	Dado - *Nut*	SS304	4(12)
19	Bullone - *Bolt*	SS304	4(6)
20	Manicotto - *Body End*	CF8M	2
21	Perno di fermo - *Stop Pin*	SS304	1

PRESSIONE / TEMPERATURA - *PRESSURE / TEMPERATURE*

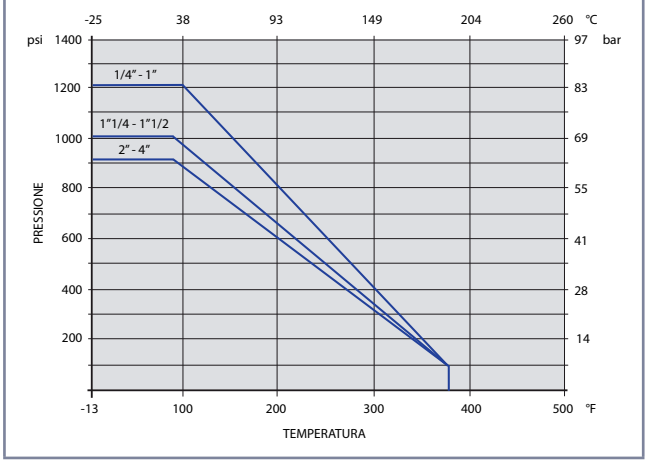

Max
+180° C
Min
-25° C

DN	
1/4" - 1"	84 bar
1"1/4 - 1"1/2	70 bar
2" - 4"	63 bar

CE

ASTA ANTISCOPPIO
ANTI BLOW-OUT STEM

NON ADATTA PER USO ALIMENTARE
NOT SUITABLE FOR FOOD CONTACT

Ed. 01/24

Tutte le caratteristiche tecnice dei prodotti sono soggette a modifiche senza preavviso - All product's technical specifications are subject to modification without prior notice

IVR S.p.A. - Via Brughiera III, 1 - Loc. Piano Rosa - 28010 Boca (NO) Italy - Phone: +39.0322.888811 - Fax: +39.0322.888892-93 - Email: vendite@ivrvalvole.it - Website: www.ivrvalvole.it

INOX - IVR 670

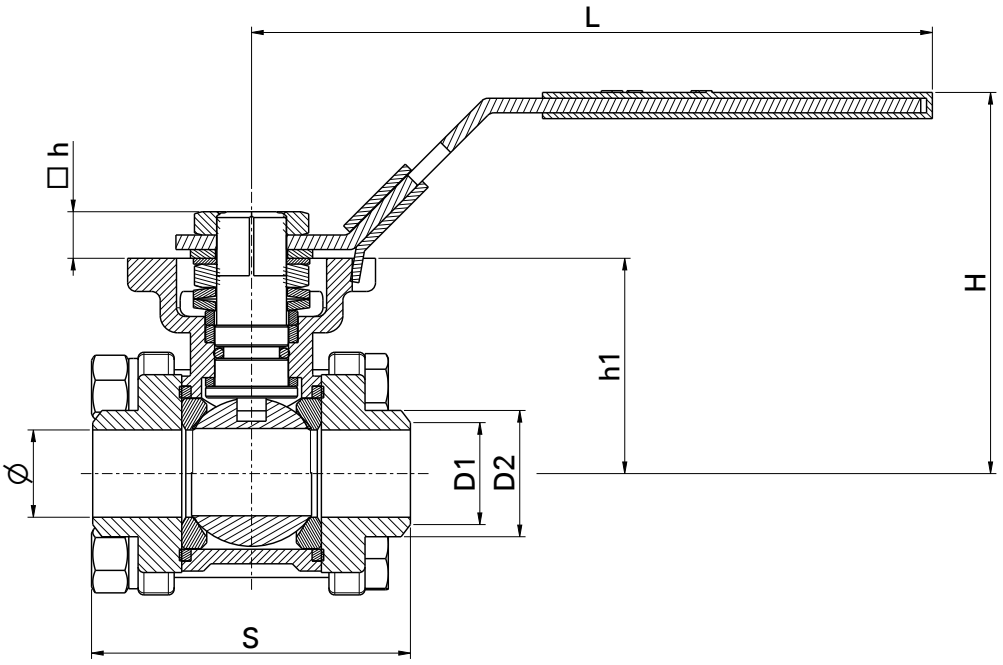

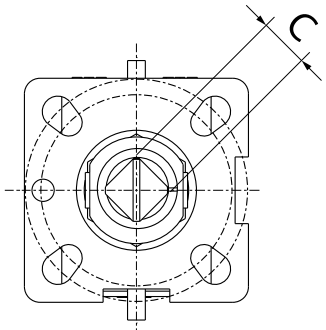

ISO 5211

DIMENSIONI - *DIMENSIONS* (mm)

DN	Ø	S	D1	D2	H	L	ISO 5211	C	□h	h1	N/m
1/4″	11	44	13	18.1	59	115	F03	9	8	32.5	4
3/8″	12.7	44	13	18.1	59	115	F03	9	8	32.5	4
1/2″	15	55	17	21.7	70	117	F03/F04	9	9	37.1	5
3/4″	20	74	22	27.2	78	134	F04/F05	11	11	42.2	8
1″	25	81	28	34	87	134	F04/F05	11	11	45	10
1″1/4	32	91	35	42.7	98	203	F05/F07	14	12.5	54	14
1″1/2	40	103	43	48.6	104	203	F05/F07	14	12.5	59.5	18
2″	50	120	54	60.5	112	203	F05/F07	14	12	68	25
2″1/2	65	151	70	76	140	255	F07/F10	17	17	100	48
3″	80	182	85	93	153	255	F07/F10	17	19	112.5	75
4″	100	220	105	116	166	302	F07/F10	17	20	125.5	110

PERDITE DI CARICO - *FLOW AND PRESSURE DROPS*

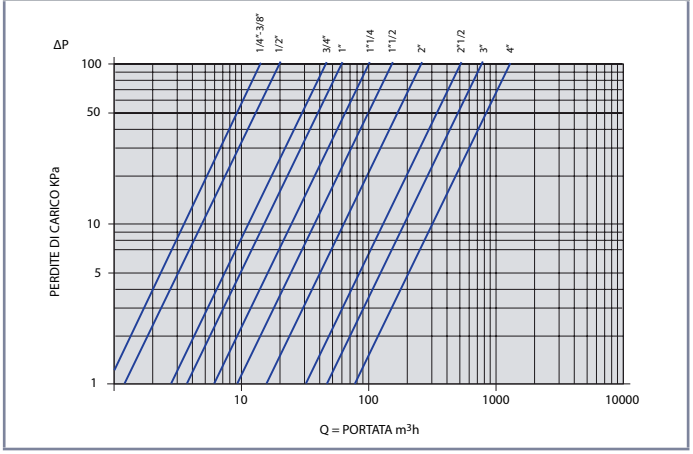

DN	KV
1/4″	15
3/8″	15
1/2″	20
3/4″	45
1″	60
1″1/4	100
1″1/2	170
2″	265
2″1/2	510
3″	790
4″	1230

Ed. 01/24

Tutte le caratteristiche tecnice dei prodotti sono soggette a modifiche senza preavviso - All product's technical specifications are subject to modification without prior notice

Innovation Value Research

IVR 272M

ATTUATORE ELETTRICO MULTI TENSIONE 24/240 ac/dc

MULTIVOLTAGE ACTUATOR 24/240 ac/dc

MAXIMUM OPERATIONAL TORQUE
20Nm – 300 Nm

20Nm V 300Nm · IP67 · 75% Duty rating · Electronic Torque Limiter · Automatic Temperature Control · Battery System Recurns · Digital Positioner System · Bluetooth · Modbus

ACTUATOR PART LIST

MODELS: S20, S35, S55, S85, B20, B35, B55 & B85

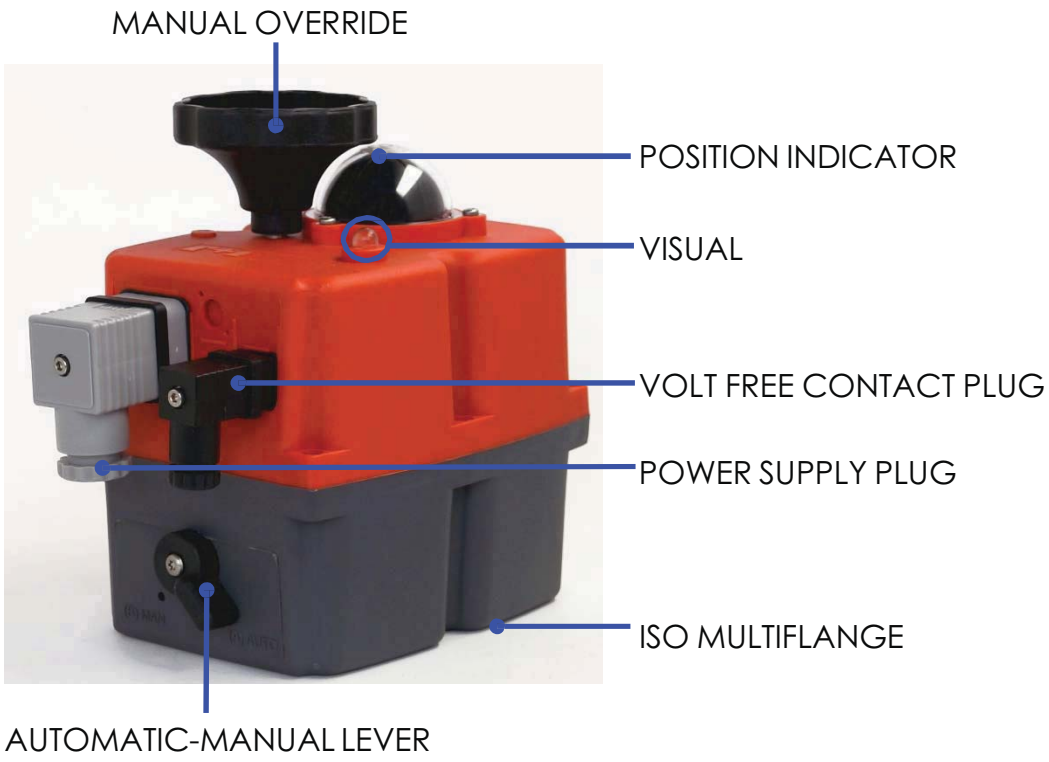

MODELS: S140, S300, B140 & B300

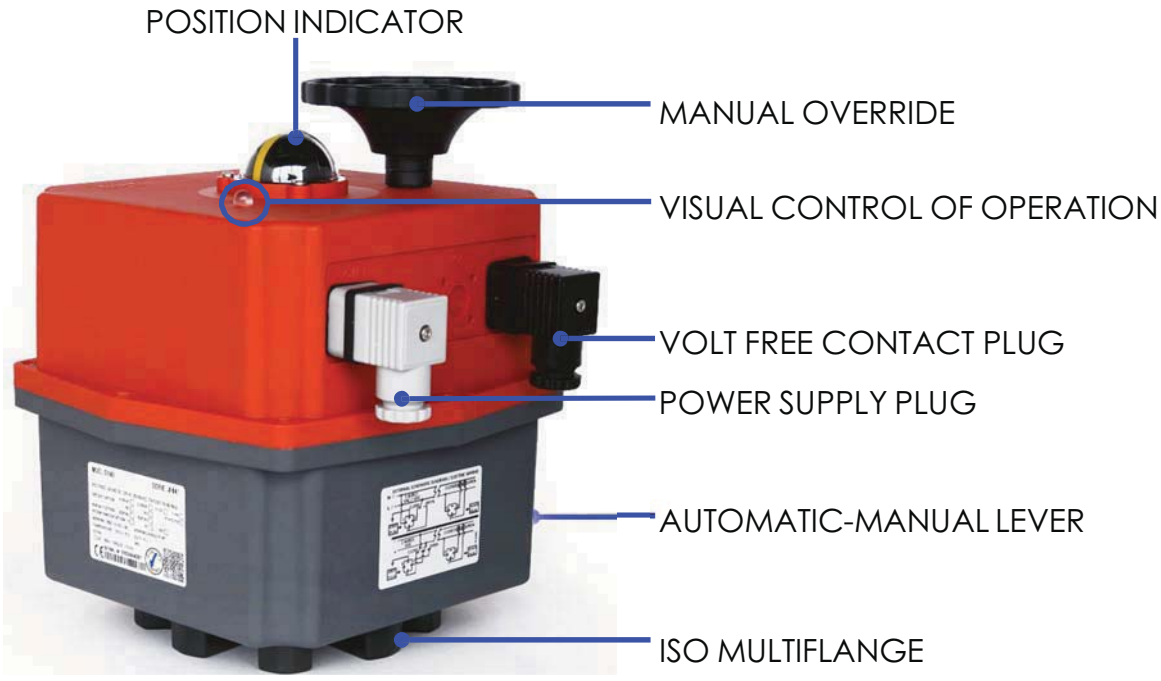

J4C SERIES - MODEL 20, 35 , 55, 85, 140 & 300

READ THESE INSTRUCTIONS BEFORE CONNECTING THE ACTUATOR. DAMAGE CAUSED BY NON COMPLIANCE OF THESE INSTRUCTIONS IS NOT COVERED BY OUR WARRANTY.

J4C Electric actuators operate with the use of live electricity. It is recommended that only qualified electrical engineers be allowed to connect or adjust these actuators.

1- VOLTAGE TO BE CONNECTED

All our actuators model S20 to S300 are ready to work from 24-240VDC/VAC.
All our actuators model B20 to B300 are ready to work at 12 VDC/VAC **ONLY**.

2.- ELECTRICAL CONNECTORS:

Warning: Before connecting ensure that the voltage to be applied to the actuator is within the range shown on the identification label. The supplied electrical connectors, used to connect to the actuator are DIN plugs. Ensure the diameter of cable to be used conforms to the maximum and minimum requirements of the DIN plugs to maintain water tightness **(Fig.1)**.

CONNECTOR	SMALL BLACK		BIG GREY or BLACK	
	DIN43650/C		EN175301-803 FORM A	
MODEL	min Ø	máx. Ø	min Ø	máx. Ø
J4C 20 a 300	5mm	6mm	8mm	10.5mm

Fig. 1

Warning: Ensure that the square rubber seal is in place when fixing each DIN plug to the actuator. Failure to do so could allow water ingress and damage caused by this installation error will invalidate any warranty. The DIN plugs are fixed to their respective bases on the actuator housing with a screw. Do not over tight the screw **(8)** when assembling (Max. 0.5Nm).

1 Gasket
2 Terminal strip
3 Cable fixing screws
4 Housing
5 Washer
6 Grommet
7 Gland - nut
8 Fixing screw
9 Washer
10 Gasket

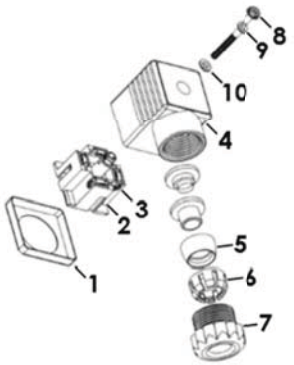

3.-ID ACTUATOR LABEL

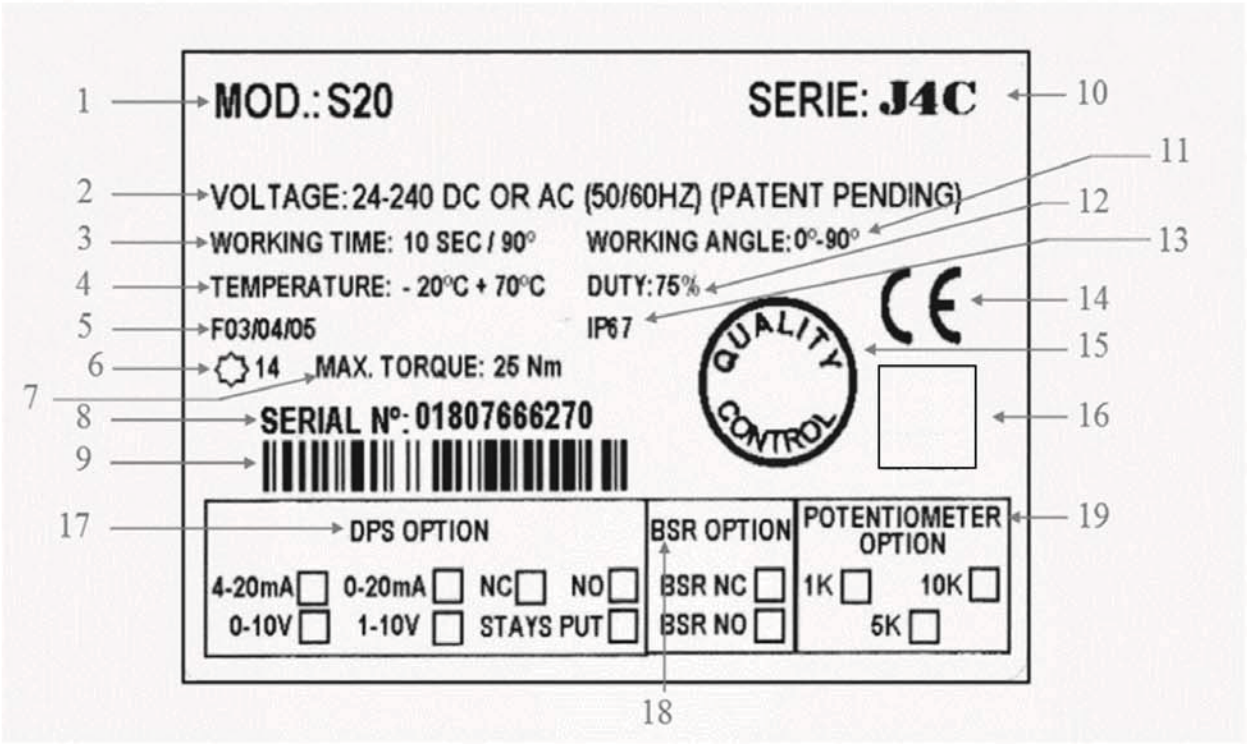

1-Actuator Model.

2-Voltage to be connected.

3-Time the actuator needs to run to the indicated degrees.

4-Actuator ready to bear between –20ºC y + 70ºC.

5-Plate to fix the valve to the actuator, following ISO 5211.

6-Female output drive size, following DIN3337.

7-Maximum torque break.

8-Actuator serial number.

9-Bar code of the serial number.

10-Actuator Series.

11-Working angle.

12-Duty: 75%.

Example: S20 Model - Maneuver time = 10sec. Time between maneuvers = 3.3 sec.

13-Actuator with the IP67 protection.

14-Actuator with the CE certificate.

15-Quality Control Conformity .

16-QR code for manufacturing.

17-DPS options.

18-BSR options.

19-POTENTIOMETER options.

4.- LOCAL VISUAL POSITION INDICATOR:

All **J4C** actuators are supplied with a local visual position indicator comprises a black base with a yellow insert that shows, both the position and direction of rotation **(Fig.6)** . The open and close positions have the following logos molded into the top cover OPEN 90 and CLOSE 0.
Opening = ⟲ Closing = ⟳

Fig. 6
0 = CLOSE

Fig. 6
90 = OPEN

OTHER OPTIONS LOCAL VISUAL POSITION INDICATOR:

TWO YELLOW INDICATORS:
For 3 way ball valve, **L** port.

TWO YELLOW INDICATORS:
For 3 way ball valve, **T** port.

5.- EMERGENCY MANUAL OVERRIDE FACILITY:

The **J4C** has 2 operating modes, automatic and manual , the required mode is selected by using a lever on the lower half of the actuator housing **(Fig 7)**.

The 2 positions are marked:

AUTO = Automatic operation

MAN = Manual operation

Warning: Do not remove the selector lever securing screw,

as this will allow its internal mechanism to become loose and

will cause irreparable damage to the actuator's gearbox.

Removing this screw will invalidate the warranty.

When **"AUTO"** position is selected:

The hand wheel, of models 20,35,55, and 85 rotates automatically, it is very important not to block it, otherwise the actuator could suffer unrepairable damages.

When **"MAN"** function is selected:

1-The electronic system cuts the power to the motor after a few minutes.

2-The mechanical connection between the motor and the output shaft is disconnected.

3-The desired position can be achieved by using the hand wheel.

4-There are two ways to re-active the motor after being isolated whilst in "MAN" position:

a) With the actuator in "MAN" function, turn the hand wheel to one of the end positions (open or close). If the end position switch is activated the motor stops. Now change the manual override from "MAN" to "AUTO" , and the actuator is ready to operate automatically again.

b) Change from "MAN" mode to "AUTO". Deactivate the supply voltage for a few seconds which resets the actuator and it could operate automatically again.

Adjustment of the cams

Under normal conditions, the actuator may only be operated with the closed cover.

If work is performed on the actuator with the removed cover, the supply and control voltage must first be disconnected. Adjustments, which need to be done in the energized state, should be carried out with special insulated tools.

How to do it: Tolling: One special plastic wrench (is supplied together with the actuator). The wrench is tied together with the motor by using one plastic clamp.

To move the cams, introduce the special plastic wrench in the hole of the cam and turn it round (see both options on the enclosed pictures).

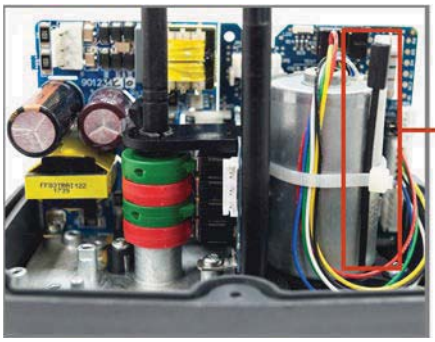

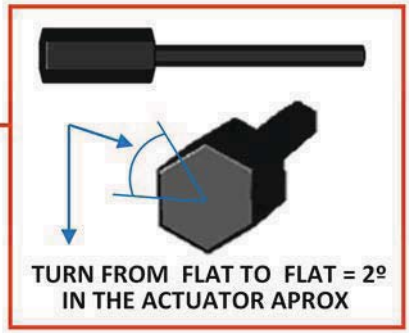

POSITION OF THE CAMS

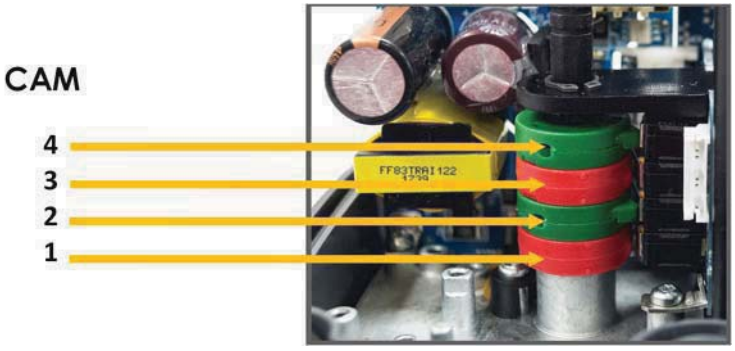

Cams 1 and 3

Cams 2 and 4

Adjustment of the cams

1) Cam **1** is to adjust the close position.

2) Cam **2** is to adjust the open position.

3) Cam **3** is to adjust the close position confirmation.

To ensure that the position confirmation works, adjust the confirmation cams (3 & 4) 3° (+/-1°) before the motor stop.

The standard actuators are always adjusted at 0° (close) and 90°

1.- *To adjust the close position at less than 0°.*

Turn the wrench to clockwise direction - cams 1 and 3.

The cam 3 should press the lever of the micro switch a bit earlier than the cam 1.

CAMS 1 / 3

2.- *To adjust the close position at more than 0°.*

Turn the wrench to anti-clockwise direction - cams 1 and 3.

The cam 3 should press the lever of the micro switch a bit earlier than the cam 1.

CAMS 1 / 3

3.- *To adjust the open position to more than 90°.*

Turn the wrench to anti-clockwise direction - cams 2 and 4.

The cam 4 should press the lever of the micro switch a bit earlier than the cam 2.

CAMS 2 / 4

4.- *To adjust the open position to less than 90°*

Turn the wrench to clockwise direction - cams 2 and 4.

The cam 4 must press the lever of the micro switch a bit earlier than the cam 2.

CAMS 2 / 4

TABLE OF CONSUMPTIONS

J4C 20 Consumption		Unload		Max. Operational Torque 20Nm		Max. Torque Break 25Nm	
Voltage	Model	A	W	A	W	A	W
12 VDC	B20	0,75	9,06	1,80	21,60	1,95	23,36
24 VDC	S20	0,45	10,77	0,90	21,49	0,97	23,39
48 VDC	S20	0,21	9,93	0,42	20,38	0,46	22,07
110 VDC	S20	0,07	8,00	0,13	14,30	0,14	15,70
12 VAC	B20	1,04	12,51	1,85	22,18	2,28	27,32
24 VAC	S20	0,59	14,20	1,12	26,77	1,28	30,62
48 VAC	S20	0,34	16,37	0,69	33,16	0,75	36,22
110 VAC	S20	0,14	15,73	0,27	29,52	0,30	32,67
240 VAC	S20	0,10	23,76	0,15	36,43	0,16	39,07

J4C 35 Consumption		Unload		Max. Operational Torque 35Nm		Max. Torque Break 38Nm	
Voltage	Model	A	W	A	W	A	W
12 VDC	B20	0,75	9,06	2,38	28,62	2,62	31,50
24 VDC	S20	0,45	10,77	1,28	30,78	1,37	32,79
48 VDC	S20	0,21	9,93	0,56	26,72	0,59	28,20
110 VDC	S20	0,07	7,70	0,17	18,90	0,18	20,10
12 VAC	B20	1,04	12,51	2,75	33,00	3,19	38,28
24 VAC	S20	0,59	14,20	1,58	37,80	1,67	40,13
48 VAC	S20	0,34	16,37	0,92	44,04	0,99	47,31
110 VAC	S20	0,14	15,73	0,36	39,45	0,38	41,87
240 VAC	S20	0,10	23,76	0,19	45,41	0,20	47,52

J4C 55 Consumption		Unload		Max. Operational Torque 55Nm		Max. Torque Break 60Nm	
Voltage	Model	A	W	A	W	A	W
12 VDC	B20	0,70	8,45	3,04	36,43	3,42	41,05
24 VDC	S20	0,42	10,19	1,55	37,17	1,63	39,02
48 VDC	S20	0,20	9,72	0,61	29,25	0,67	32,31
110 VDC	S20	0,07	7,50	0,19	20,80	0,21	23,20
12 VAC	B20	0,94	11,30	3,43	41,18	3,78	45,41
24 VAC	S20	0,58	13,89	1,87	44,88	1,98	47,52
48 VAC	S20	0,33	15,73	1,10	52,80	1,21	58,29
110 VAC	S20	0,14	15,73	0,40	43,80	0,43	46,95
240 VAC	S20	0,09	22,70	0,20	47,52	0,21	50,16

J4C 85 Consumption		Unload		Max. Operational Torque -85Nm		Max. Torque Break -90Nm	
Voltage	Model	A	W	A	W	A	W
12 VDC	B20	0,62	7,42	2,11	25,34	2,28	27,32
24 VDC	S20	0,36	8,55	1,08	25,87	1,22	29,30
48 VDC	S20	0,17	8,24	0,48	22,92	0,53	25,56
110 VDC	S20	0,05	5,80	0,14	15,20	0,16	17,90
12 VAC	B20	0,81	9,69	2,38	28,51	2,65	31,81
24 VAC	S20	0,50	11,88	1,36	32,74	1,50	36,01
48 VAC	S20	0,25	11,83	0,77	37,07	0,86	41,18
110 VAC	S20	0,12	12,83	0,31	33,64	0,33	36,54
240 VAC	S20	0,08	20,06	0,17	40,13	0,18	42,77

J4C 140 Consumption		Unload		Max. Operational Torque 140Nm		Max. Torque Break 170Nm	
Voltage	Model	A	W	A	W	A	W
12 VDC	B140	1,93	23,10	4,73	56,76	5,39	64,68
24 VDC	S140	0,66	15,84	2,15	51,48	2,53	60,72
48 VDC	S140	0,30	14,25	0,88	42,24	1,10	52,80
110 VDC	S140	0,10	10,89	0,28	30,25	0,39	42,35
12 VAC	B140	2,75	33,00	6,60	79,20	8,47	101,64
24 VAC	S140	0,83	19,80	2,59	62,04	3,30	79,20
48 VAC	S140	0,48	23,23	1,43	68,64	1,79	86,06
110 VAC	S140	0,23	25,41	0,63	68,97	0,72	78,65
240 VAC	S140	0,18	42,24	0,39	90,40	0,44	105,60

J4C 300 Consumption		Unload		Max. Operational Torque 300Nm		Max. Torque Break 350Nm	
Voltage	Model	A	W	A	W	A	W
12 VDC	B300	1,32	15,84	5,17	62,04	5,45	65,34
24 VDC	S300	0,50	11,88	2,31	55,44	2,70	64,68
48 VDC	S300	0,22	10,56	1,10	52,80	1,19	57,02
110 VDC	S300	0,09	9,68	0,33	36,30	0,39	42,35
12 VAC	B300	1,98	23,76	7,26	87,12	8,64	103,62
24 VAC	S300	0,66	15,84	2,75	66,00	3,30	79,20
48 VAC	S300	0,36	17,42	1,65	79,20	1,87	89,76
110 VAC	S300	0,19	20,57	0,66	72,60	0,77	84,70
240 VAC	S300	0,15	36,96	0,42	100,32	0,47	113,52

EXTERNAL CONNECTING DIAGRAM

3 WIRES ON - OFF

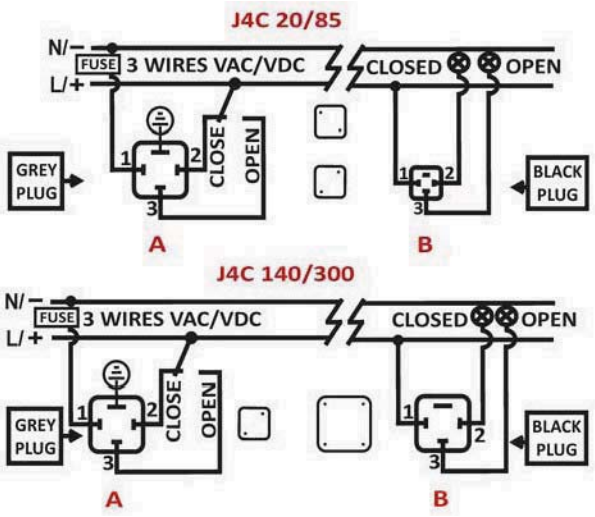

A = Power supply plug

A: VAC 3 WIRES (Grey plug)

PIN 1 = Neutral + PIN 2 = Phase = Close

PIN 1 = Neutral + PIN 3 = Phase = Open

A: VDC 3 WIRES (Grey plug)

PIN 1 = (-) Negative + PIN 2 = (+) Positive = Close

PIN 1 = (-) Negative + PIN 3 = (+) Positive = Open

B = Volt free contact, plug

PIN 1 / PIN 2 = Close

PIN 1 / PIN 3 = Open

2 WIRES ON - OFF

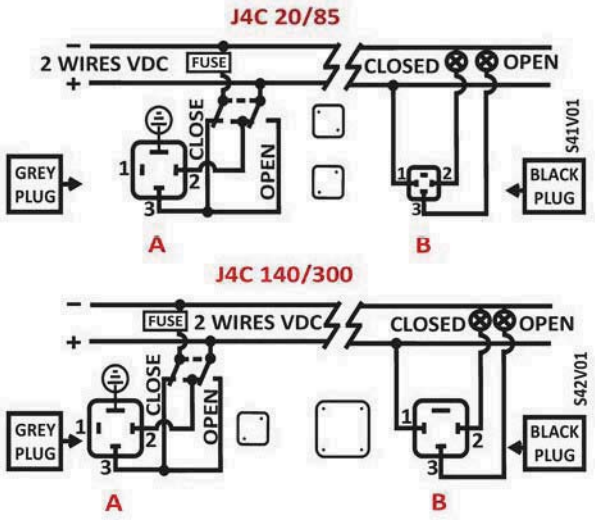

A = Power supply plug

A: VDC 2 WIRES (Grey plug)

PIN 2 = (+) Positive + PIN 3 = (-) Negative = Close

PIN 2 = (-) Negative + PIN 3 = (+) Positive = Open

B = Volt free contact plug

PIN 1 / PIN 2 = Close

PIN 1 / PIN 3 = Open

POSITIONER

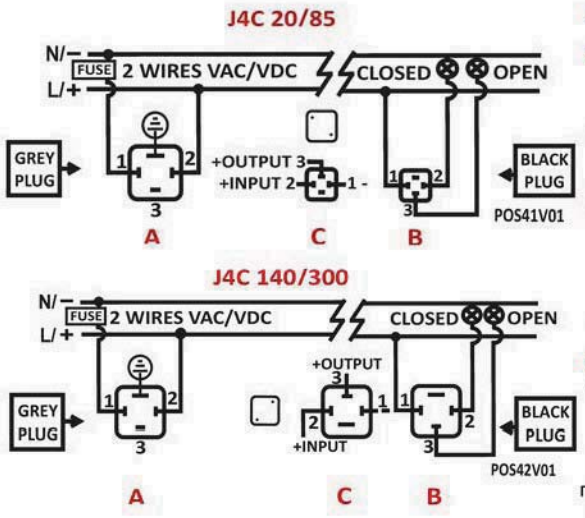

A = Power supply plug

A: VAC 2 WIRES (Grey plug)

PIN 1 = Neutral + PIN 2 = Phase = Power supply plug

A: VDC 2 WIRES (Grey plug)

PIN1=(-) Negative + PIN 2=(+) Positive = Power supply plug

B = Volt free contact plug

PIN 1 / PIN 2 = Closed

PIN 1 / PIN 3 = Open

C = Instrumentation Signal

C: Input signal : 4/20mA or 0/10V

PIN 1 = (-) Negative + PIN 2 = (+) Positive = Input signal

PIN 1 = (-) Negative + PIN 3 = (+) Positive = Output signal

Instrumentation Signal
NO VOLTAGE

ACTUATOR OPERATIONAL STATUS

The LED Light provides visual communication between the actuator and the user. The current operational status is shown by different LED colors.

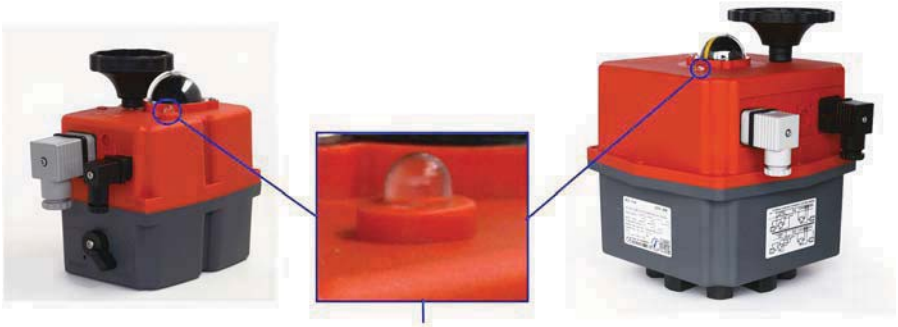

VISUAL CONTROL OF OPERATION

ON-OFF ACTUATOR	ACTUATOR OPERATIONAL STATUS
Without power supply	
In open position	
In close position	
Opening	
Closing	
Torque limiter function on, moving from close to open	
Torque limiter function on, moving from open to close	
Actuator in MANUAL mode (Exceeded time)	
The actuator has stopped (no close/no open position)	
In middle position	

ACTUATOR WITH BSR	ACTUATOR OPERATIONAL STATUS
Without power supply	
In open position	
In close position	
Opening	
Closing	
Torque limiter function on, moving from close to open	
Torque limiter function on, moving from open to close	
Actuator in MANUAL mode (Exceeded time)	
The actuator has stopped (no close/no open position)	
In middle position	
Actuator without power, working with the BSR NO system. Max.3 min., (led off)	
Actuator without power, working with the BSR NC system. Max.3 min., (led off)	
Battery protection. Danger, the battery needs recharging. BSR blocked	

ACTUATOR OPERATIONAL STATUS

ACTUATOR WITH DPS	ACTUATOR OPERATIONAL STATUS
Without power supplied	
Motor stop	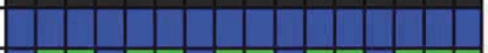
Opening	
Closing	
Self adjusting configuration	
Torque limiter function on, moving from close to open	
Torque limiter function on, moving from open to close	
Instrum. Signal overpassed. Blocked actuator. Need a re-set.	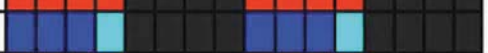
Actuator in MANUAL mode (exceeded time)	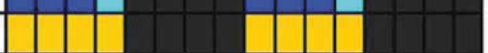
No Instrum. Signal pick-up. 4-20mA and 1-10V only.	

J4C 20 ON – OFF INFORMATION

IVR CODE: 127202001

GENERAL CHARACTERISTICS
Housing: Anticorrosive polyamide (lid & body)
Main external shaft: Anticorrosive polyamide
External screws: stainless steel
Gears: Steel and polyamide
Visual position indicator: Polyamide
Dome: Polycarbonate
Adjustable internal cams: Polyamide
Electric motor: 24VDC Brushless motor
Insulation: Class B
(IEC 60034) Service: S4

DATASHEET

Model	S20	B20
Voltage VDC/VAC 50/60Hz -0/+5%	24 a 240 (Patent Pending)	12 V **ONLY**
Operation time unload	9 Sec./90°	9 Sec./90°
Maximum torque break	25 Nm / 221 lb/in	25 Nm / 221 lb/in
Maximum operational torque	20 Nm / 177 lb/in	20 Nm / 177 lb/in
Duty rating	75 %	75 %
Max. Working angle	0° to 270°	0° to 270°
Limit switch	4 SPST NO micro (2 motor stop and 2 confirmations)	4 SPST NO micro (2 motor stop and 2 confirmations)
Automatic heater	3,5 W	3,5 W
Big Plug	EN175301-803 FORM A	EN175301-803 FORM A
Small Plug	DIN43650/C	DIN43650/C
Protection IEC 60529 rating	IP67	IP67
Temperature	-20°C +70°C / -4°F +158°F	-20°C +70°C / -4°F +158°F
Weight	1,8 Kg	1,8 Kg

VALVE CONNECTION

ISO 5211 Plate : F03/F04/F05
DIN 3337 Female output drive : *14 mm

Options:
DIN 3337 Female output drive: *9 or *11 mm
F05 to F07 Conversion Kit with *17mm output

OPTIONS

-J4C 20/85 DPS digital positioner: 4-20mA, 0-20mA, 0-10V or 1-10V.
-J4C 20/85 BSR emergency fail safe kit system by battery

J4C 20 SIZES

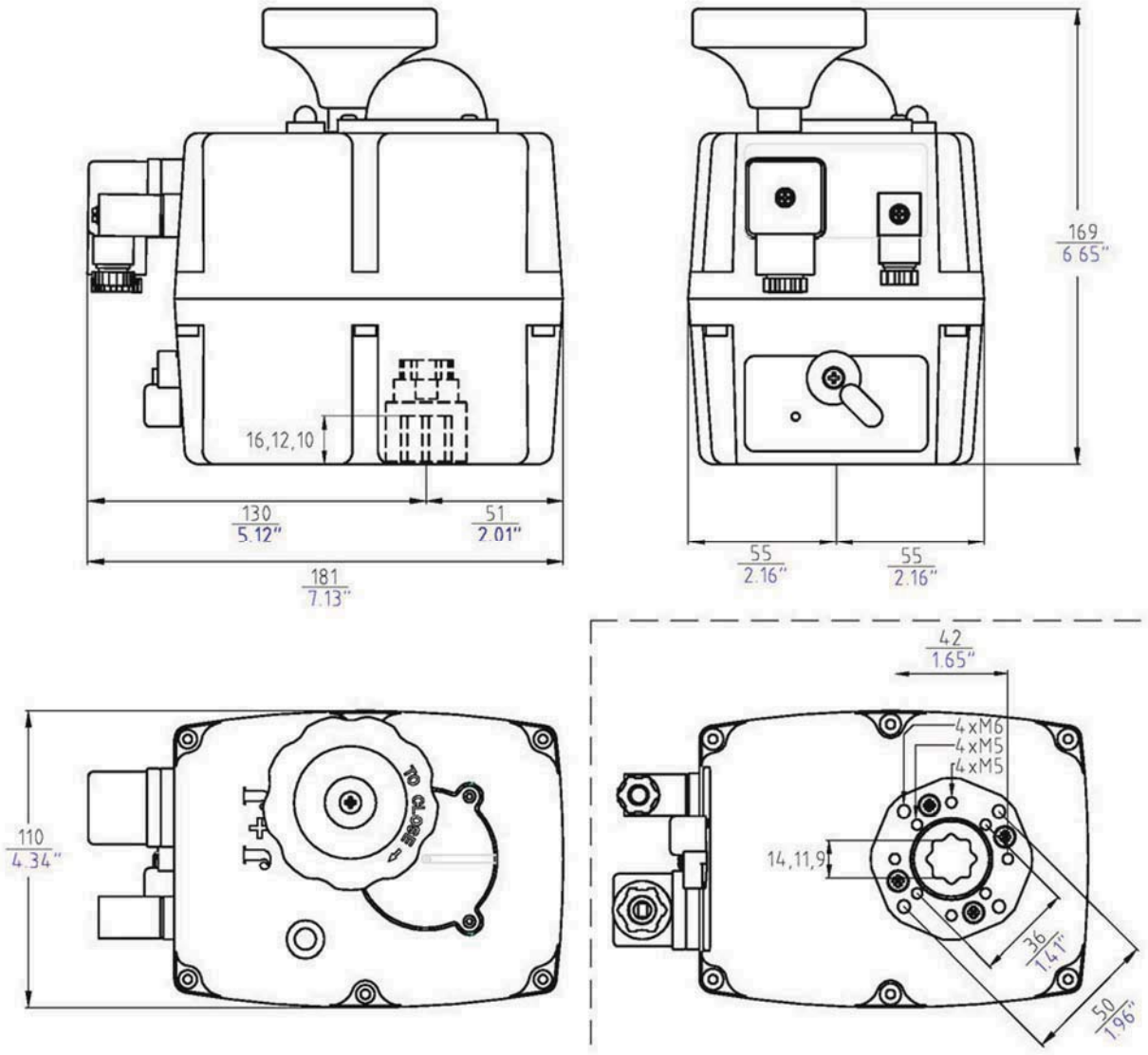
16,12,10
130
5.12"
51
2.01"
181
7.13"
169
6.65"
55
2.16"
55
2.16"
110
4.34"
42
1.65"
4xM6
4xM5
4xM5
14,11,9
36
1.41"
50
1.96"

J4C 35 ON – OFF INFORMATION IVR CODE: 127203501

GENERAL CHARACTERISTICS
Housing: Anticorrosive polyamide (lid & body)
Main external shaft: stainless steel
External screws: stainless steel
Gears: Steel and polyamide
Visual position indicator: Polyamide
Dome: Polycarbonate
Adjustable internal cams: Polyamide
Electric motor: 24VDC Brushless motor
Insulation: Class B
(IEC 60034) Service: S4

DATASHEET

Model	S35	B35
Voltage VDC/VAC 50/60Hz -0/+5%	24 a 240 (Patent Pending)	12 V **ONLY**
Operation time unload	9 Sec./90°	9 Sec./90°
Maximum torque break	38 Nm / 359,3 lb/in	38 Nm / 359,3 lb/in
Maximum operational torque	35 Nm / 309 lb/in	35 Nm / 309 lb/in
Duty rating	75 %	75 %
Max. Working angle	0° to 270°	0° to 270°
Limit switch	4 SPST NO micro (2 motor stop and 2 confirmation)	4 SPST NO micro (2 motor stop and 2 confirmation)
Automatic heater	3,5 W	3,5 W
Big Plug	EN175301-803 FORM A	EN175301-803 FORM A
Small Plug	DIN43650/C	DIN43650/C
Protection IEC 60529 rating	IP67	IP67
Temperature	-20°C +70°C / -4°F +158°F	-20°C +70°C / -4°F +158°F
Weight	1,9 Kg	1,9 Kg

VALVE CONNECTION

ISO 5211 Plate : F03/F04/F05
DIN 3337 Female output drive : *14 mm

Options:
DIN 3337 Female output drive: *9 or *11 mm
F05 to F07 Conversion Kit with *17mm output

OPTIONS

-J4C 20/85 DPS digital positioner: 4-20mA, 0-20mA, 0-10V or 1-10V.
-J4C 20/85 BSR emergency fail safe kit system by battery
-Digital potentiometer: 1K, 5K or 10K.
-3 position actuator: 0°-45°-90° or 0°-90°-180°

J4C 35 SIZES

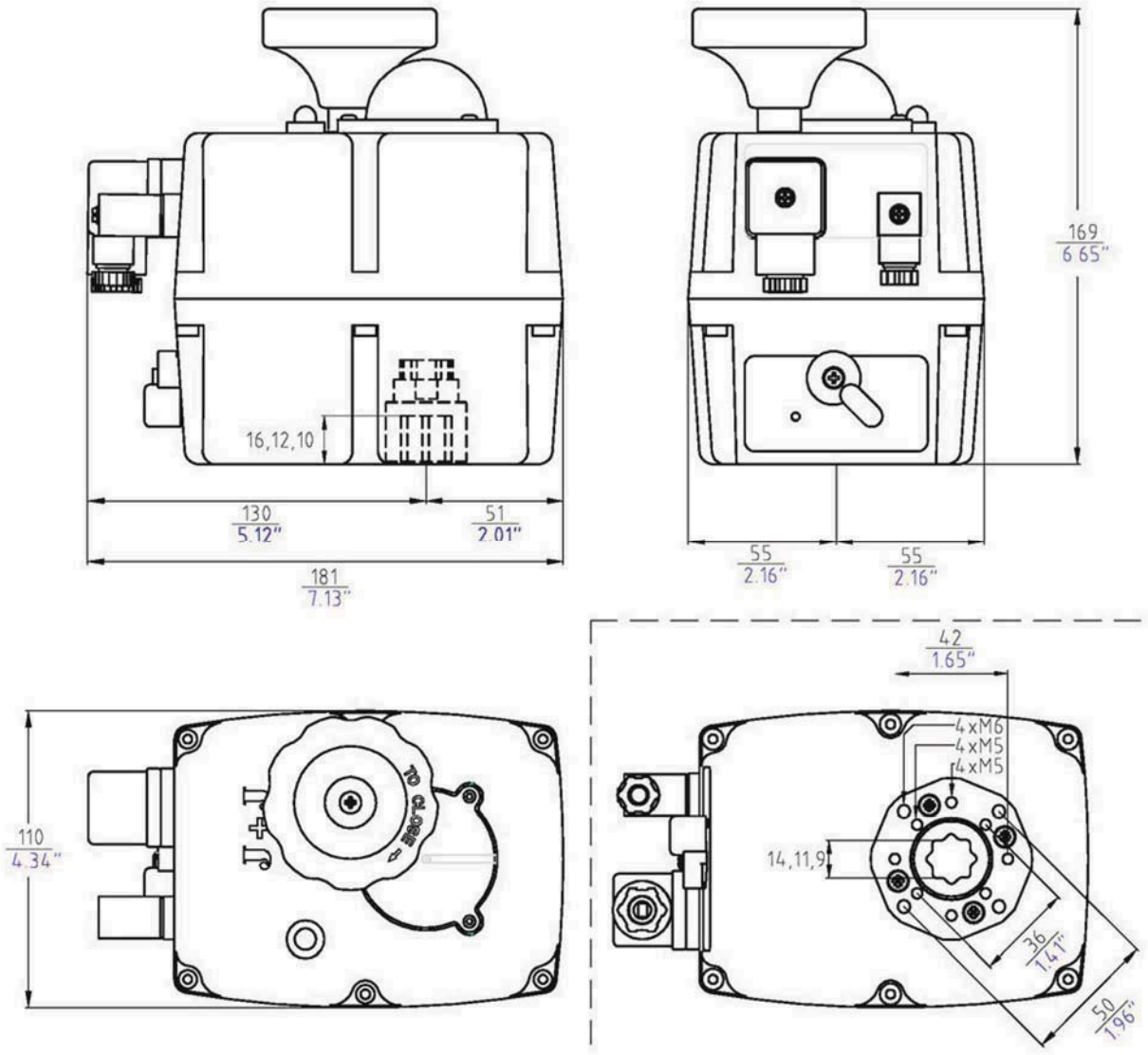
16,12,10
130
5.12"
51
2.01"
181
7.13"
169
6.65"
55
2.16"
55
2.16"
110
4.34"
J+I
42
1.65"
4xM6
4xM5
4xM5
14,11,9
36
1.41"
50
1.96"

J4C 55 ON – OFF INFORMATION IVR CODE: 127205501

GENERAL CHARACTERISTICS
Housing: Anticorrosive polyamide (lid & body)
Main external shaft: stainless steel
External screws: stainless steel
Gears: Steel and polyamide
Visual position indicator: Polyamide
Dome: Polycarbonate
Adjustable internal cams: Polyamide
Electric motor: 24VDC Brushless motor
Insulation: Class B
(IEC 60034) Service: S4

DATASHEET

Model	S55	B55
Voltage VDC/VAC 50/60Hz -0/+5%	24 a 240 (Patent Pending)	12 V **ONLY**
Operation time unload	13 Sec./90°	13 Sec./90°
Maximum torque break	60 Nm / 530 lb/in	60 Nm / 530 lb/in
Maximum operational torque	55 Nm / 486 lb/in	55 Nm / 486 lb/in
Duty rating	75 %	75 %
Max. Working angle	0° to 270°	0° to 270°
Limit switch	4 SPST NO micro (2 motor stop and 2 confirmations)	4 SPST NO micro (2 motor stop and 2 confirmations)
Automatic heater	3,5 W	3,5 W
Big Plug	EN175301-803 FORM A	EN175301-803 FORM A
Small Plug	DIN43650/C	DIN43650/C
Protection IEC 60529 rating	IP67	IP67
Temperature	-20°C +70°C / -4°F +158°F	-20°C +70°C / -4°F +158°F
Weight	2,4 Kg	2,4 Kg

VALVE CONNECTION

ISO 5211 Plate : F05/F07
DIN 3337 Female output drive : *17 mm
Option:
DIN 3337 Female output drive: *11 or *14 mm

OPTIONS

-J4C 20/85 DPS digital positioner: 4-20mA, 0-20mA, 0-10V or 1-10V.
-J4C 20/85 BSR emergency fail safe kit system by battery
-Digital potentiometer: 1K, 5K or 10K.
-3 position actuator: 0°-45°-90° or 0°-90°-180°

J4C 55 SIZES

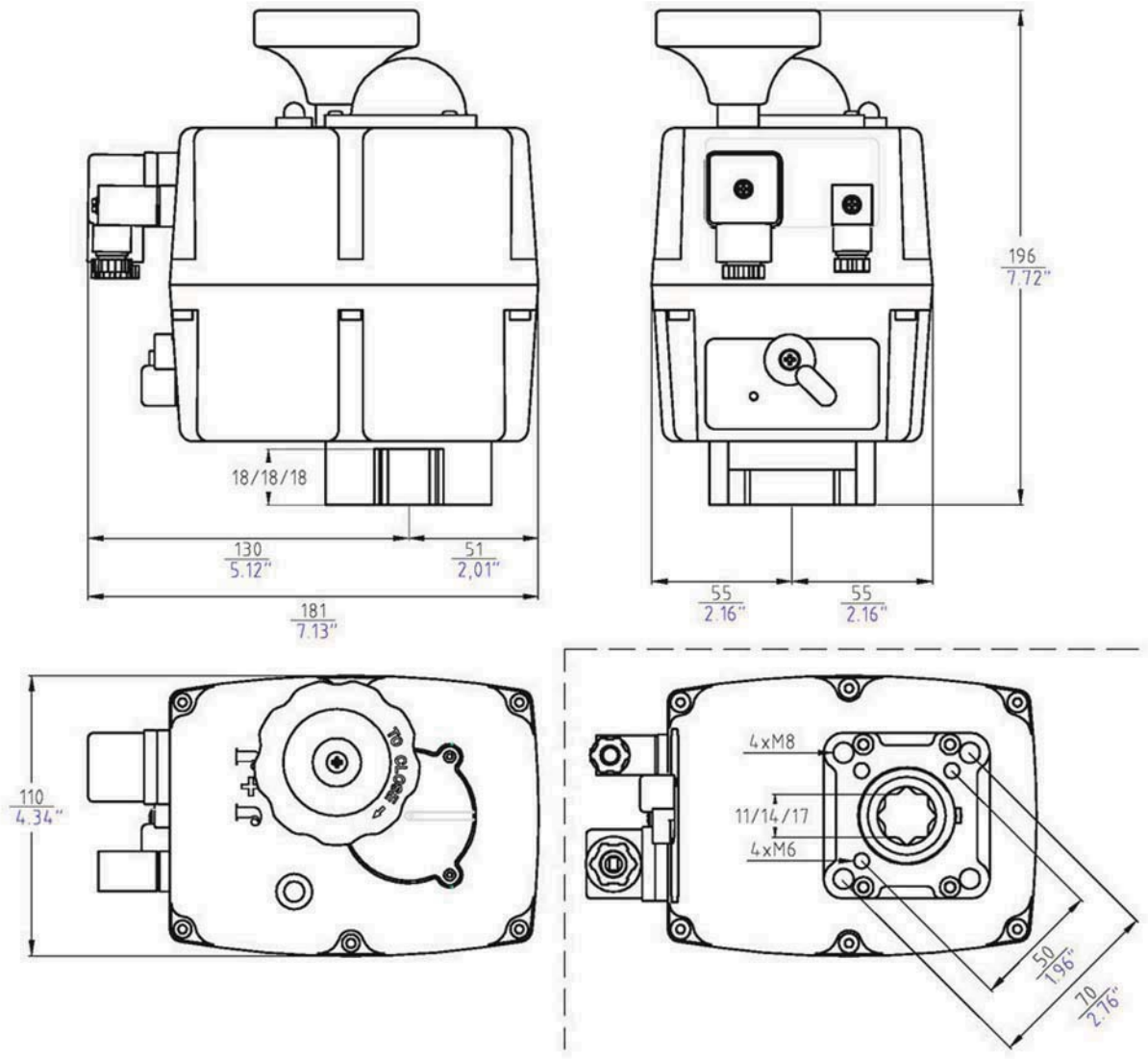
18/18/18
130
5.12"
51
2,01"
181
7.13"
196
7.72"
55
2.16"
55
2.16"
110
4.34"
TO CLOSE
4xM8
11/14/17
4xM6
50
1.96"
70
2.76"

J4C 85 ON – OFF INFORMATION

IVR CODE: 127208501

GENERAL CHARACTERISTICS
Housing: Anticorrosive polyamide (lid & body)
Main external shaft: stainless steel
External screws: stainless steel
Gears: Steel and polyamide
Visual position indicator: Polyamide
Dome: Polycarbonate
Adjustable internal cams: Polyamide
Electric motor: 24VDC Brushless motor
Insulation: Class B
(IEC 60034) Service: S4

DATASHEET

Model	S85	B85
Voltage VDC/VAC 50/60Hz -0/+5%	24 a 240 (Patent Pending)	12 V **ONLY**
Operation time unload	29 Sec./90°	29 Sec./90°
Maximum torque break	90 Nm / 796,3 lb/in	90 Nm / 796,3 lb/in
Maximum operational torque	85 Nm / 752 lb/in	85 Nm / 752 lb/in
Duty rating	75 %	75 %
Max. Working angle	0° to 270°	0° to 270°
Limit switch	4 SPST NO micro (2 motor stop and 2 confirmations)	4 SPST NO micro (2 motor stop and 2 confirmations)
Automatic heater	3,5 W	3,5 W
Big Plug	EN175301-803 FORM A	EN175301-803 FORM A
Small Plug	DIN43650/C	DIN43650/C
Protection IEC 60529 rating	IP67	IP67
Temperature	-20°C +70°C / -4°F +158°F	-20°C +70°C / -4°F +158°F
Weight	3 Kg	3 Kg

VALVE CONNECTION

ISO 5211 Plate : F05/F07
DIN 3337 Female output drive : *17 mm

Option:
DIN 3337 Female output drive: *11 or *14 mm

OPTIONS

-J4C 20/85 DPS digital positioner: 4-20mA, 0-20mA, 0-10V or 1-10V.
-J4C 20/85 BSR emergency fail safe kit system by battery
-Digital potentiometer: 1K, 5K or 10K.
-3 position actuator: 0°-45°-90° or 0°-90°-180°

J4C 85 SIZES

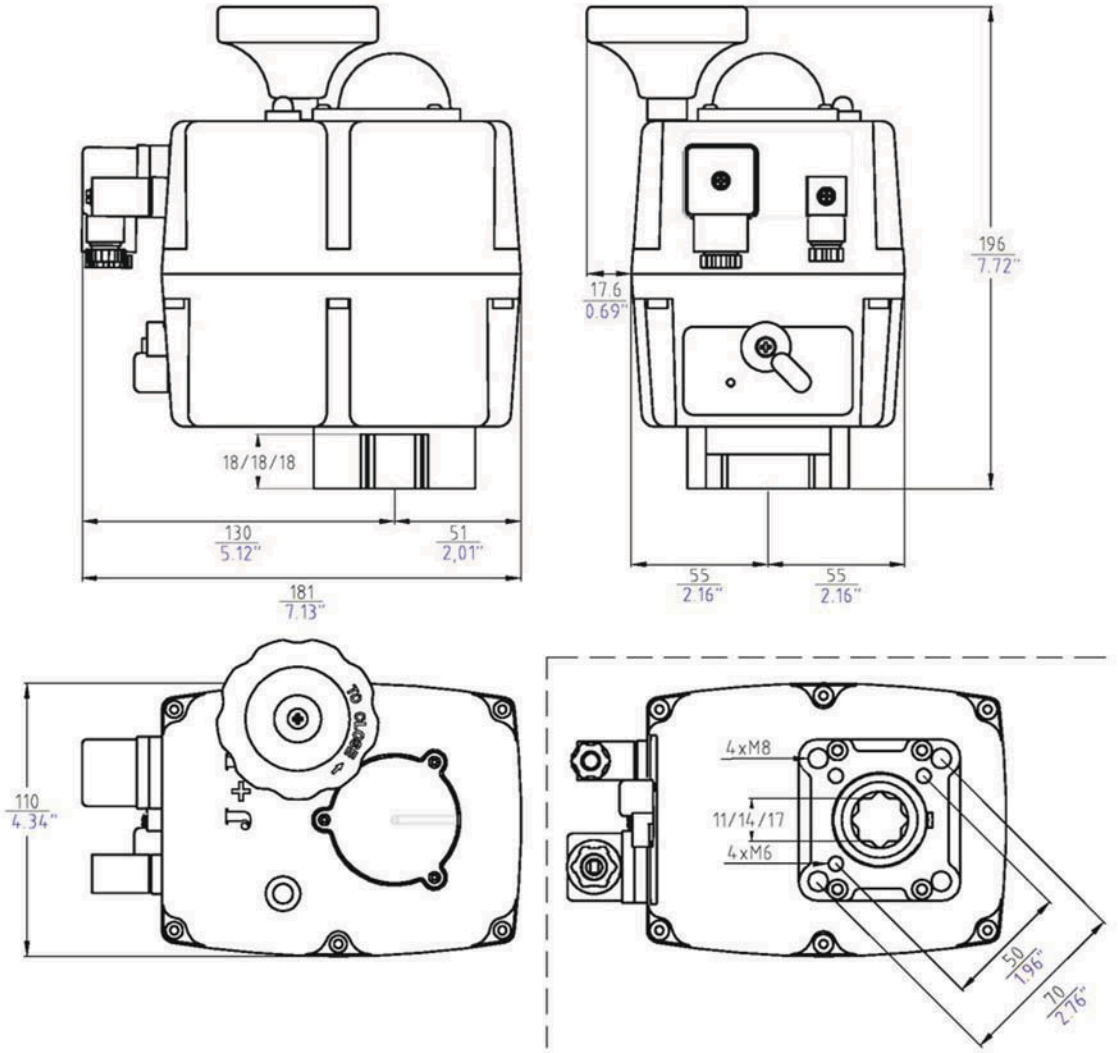
18/18/18
130
5.12"
51
2,01"
181
7.13"
17.6
0.69"
196
7.72"
55
2.16"
55
2.16"
110
4.34"
TO CLOSE
4xM8
11/14/17
4xM6
50
1.96"
70
2.76"

J4C 140 ON – OFF INFORMATION

IVR CODE: 127214001

GENERAL CHARACTERISTICS
Housing: Anticorrosive polyamide (lid & body)
Main external shaft: stainless steel
External screws: stainless steel
Gears: Steel and polyamide
Visual position indicator: Polyamide
Dome: Polycarbonate
Adjustable internal cams: Polyamide
Electric motor: 24VDC Brushless motor
Insulation: Class B
(IEC 60034) Service: S4

DATASHEET

Model	S140	B140
Voltage VDC/VAC 50/60Hz -0/+5%	24 a 240 (Patent Pending)	12 V **ONLY**
Operation time unload	34 Sec./90°	34 Sec./90°
Maximum torque break	170 Nm / 1504,5 lb/in	170 Nm / 1504,5 lb/in
Maximum operational torque	140 Nm / 1239 lb/in	140 Nm / 1239 lb/in
Duty rating	75 %	75 %
Max. Working angle	0° to 270°	0° to 270°
Limit switch	4 SPST NO micro (2 motor stop and 2 confirmations)	4 SPST NO micro (2 motor stop and 2 confirmations)
Automatic heater	3,5 W	3,5 W
Big Plug	EN175301-803 FORM A	EN175301-803 FORM A
Small Plug	DIN43650/C	DIN43650/C
Protection IEC 60529 rating	IP67	IP67
Temperature	-20°C +70°C / -4°F +158°F	-20°C +70°C / -4°F +158°F
Weight	5,2 Kg	5,2 Kg

VALVE CONNECTION

ISO 5211 Plate : F07/F10
DIN 3337 Female output drive : *22 mm

Option:
ISO 5211 Plate : F12
DIN 3337 Female output drive: *17 mm

OPTIONS

-J4C 140/300 DPS digital positioner: 4-20mA, 0-20mA, 0-10V or 1-10V.
-J4C 140/300 BSR emergency fail safe kit system by battery
-Digital potentiometer: 1K, 5K or 10K.
-3 position actuator: 0°-45°-90° or 0°-90°-180°

J4C 140 SIZES

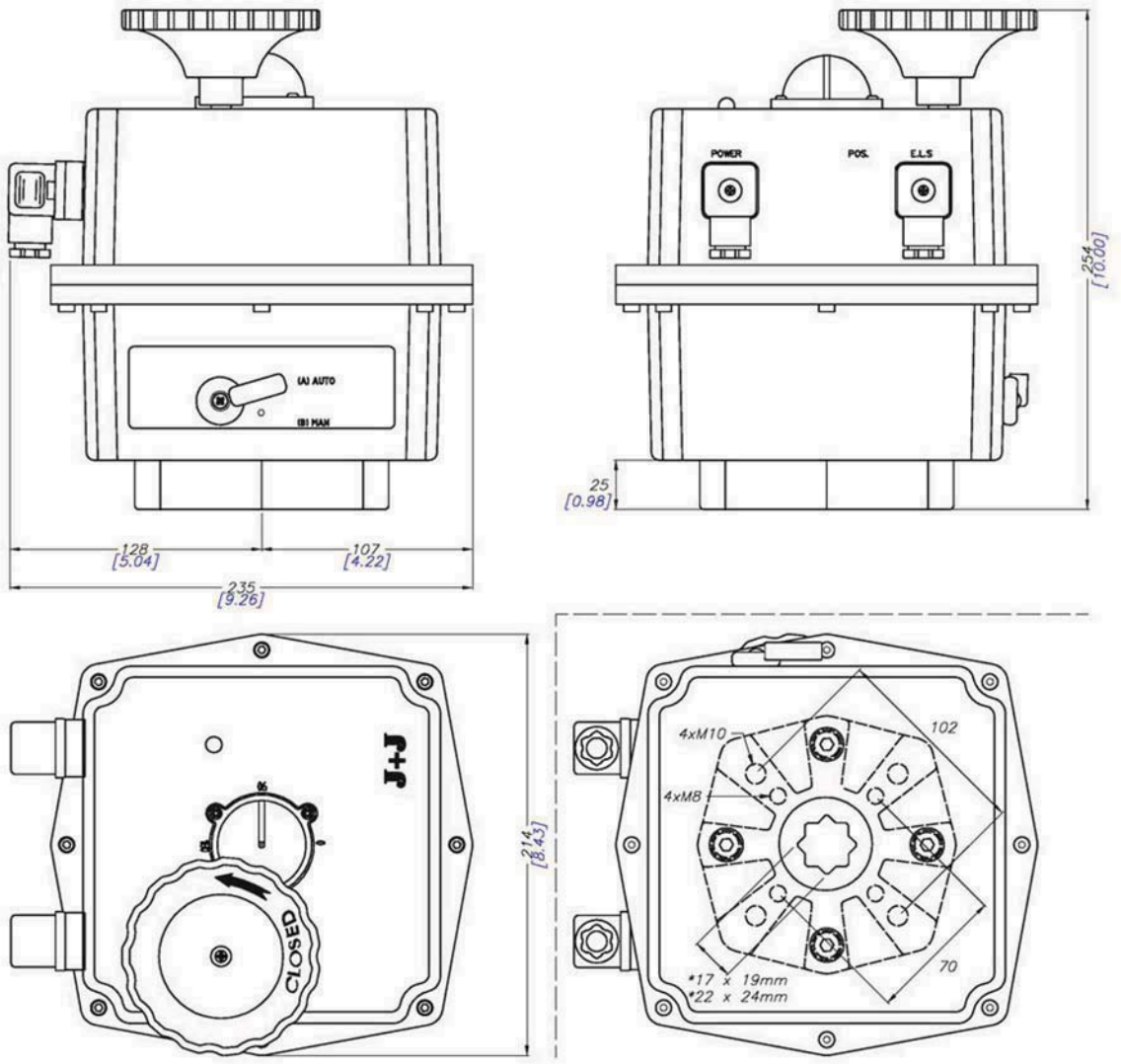

J4C 300 ON – OFF INFORMATION IVR CODE: 127230001

GENERAL CHARACTERISTICS
Housing: Anticorrosive polyamide (lid & body)
Main external shaft: stainless steel
External screws: stainless steel
Gears: Steel and polyamide
Visual position indicator: Polyamide
Dome: Polycarbonate
Adjustable internal cams: Polyamide
Electric motor: 24VDC Brushless motor
Insulation: Class B
(IEC 60034) Service: S4

DATASHEET

Model	S300	B300
Voltage VDC/VAC 50/60Hz -0/+5%	24 a 240 (Patent Pending)	12 V **ONLY**
Operation time unload	58 Sec./90°	58 Sec./90°
Maximum torque break	350 Nm / 3097,5 lb/in	350 Nm / 3097,5 lb/in
Maximum operational torque	300 Nm / 2655 lb/in	300 Nm / 2655 lb/in
Duty rating	75 %	75 %
Max. Working angle	0° to 270°	0° to 270°
Limit switch	4 SPST NO micro (2 motor stop and 2 confirmations)	4 SPST NO micro (2 motor stop and 2 confirmations)
Automatic heater	3,5 W	3,5 W
Big Plug	EN175301-803 FORM A	EN175301-803 FORM A
Small Plug	DIN43650/C	DIN43650/C
Protection IEC 60529 rating	IP67	IP67
Temperature	-20°C +70°C / -4°F +158°F	-20°C +70°C / -4°F +158°F
Weight	5,2 Kg	5,2 Kg

VALVE CONNECTION

ISO 5211 Plate : F07/F10
DIN 3337 Female output drive : *22 mm

Option:
ISO 5211 Plate : F12
DIN 3337 Female output drive: *17 mm

OPTIONS

-J4C 140/300 DPS digital positioner: 4-20mA, 0-20mA, 0-10V or 1-10V.
-J4C 140/300 BSR emergency fail safe kit system by battery
-Digital potentiometer: 1K, 5K or 10K.
-3 position actuator: 0°-45°-90° or 0°-90°-180°

J4C 300 SIZES

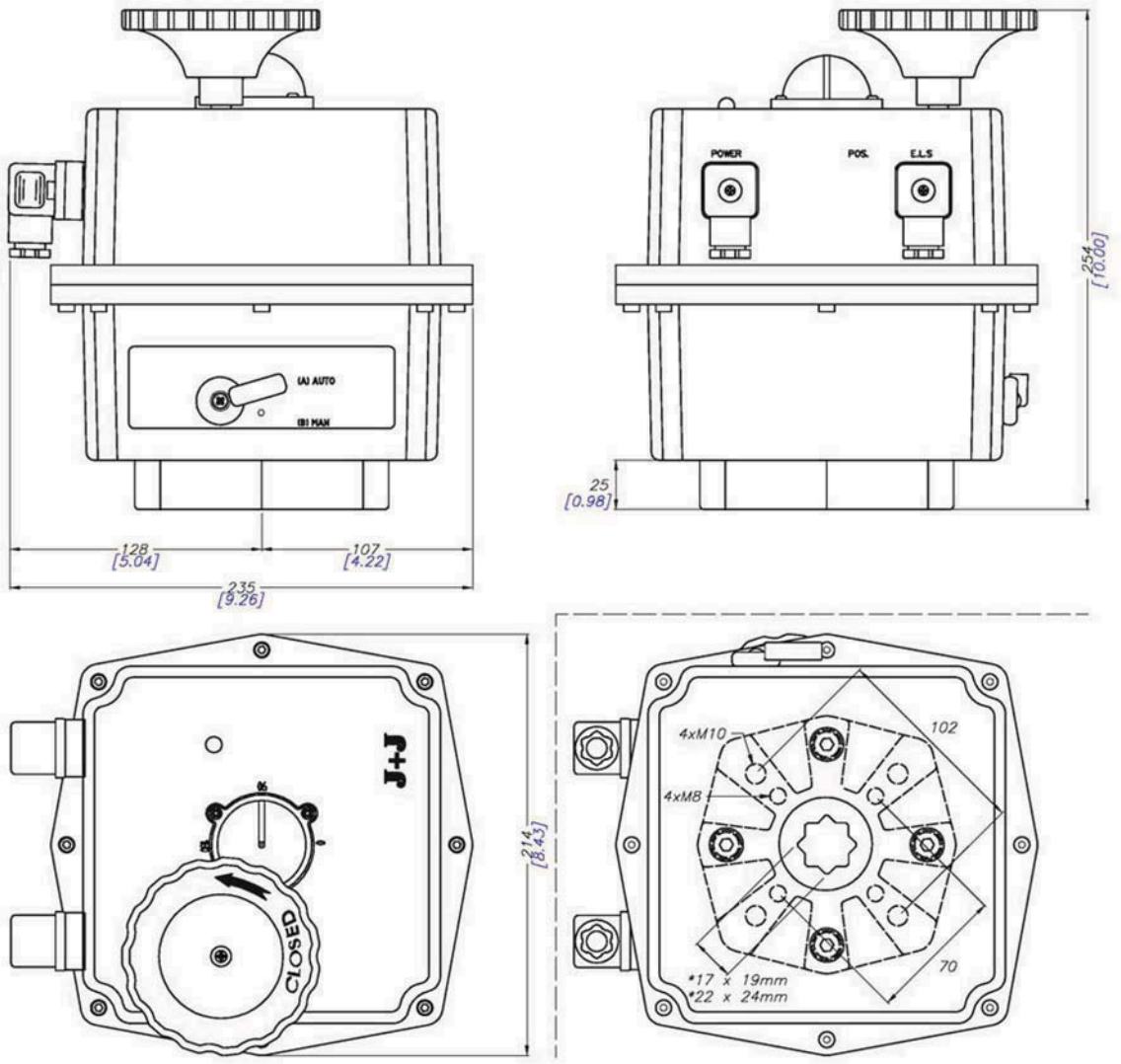

J4C 20/35/55/85 POSITIONER INFORMATION (DPS)

SPECIFICATIONS				
MODEL	**S20-B20**	**S35-B35**	**S55-B55**	**S85-B85**
Accuracy	3 % F.S.	3 % F.S.	3 % F.S.	3 % F.S.
Linearity	2 % F.S.	2 % F.S.	2 % F.S.	2 % F.S.
Hysteresis	3 % F.S.	3 % F.S.	3 % F.S.	3 % F.S.
Steps at 4/20mA	Min.150 steps 90°	Min.150 steps 90°	Min.150 steps 90°	Min.150 steps 90°
Steps at 0/10V	Min.98 steps 90°	Min.98 steps 90°	Min.98 steps 90°	Min.98 steps 90°
Steps at 0/20mA	Min.150 steps 90°	Min.150 steps 90°	Min.150 steps 90°	Min.150 steps 90°
Steps at 1/10V	Min.87 steps 90°	Min.87 steps 90°	Min.87 steps 90°	Min.87 steps 90°
4/20mA or 0/20mA Input signal impedance	100 Ohm	100 Ohm	100 Ohm	100 Ohm
0/10V or 1/10V Input signal impedance	25 KOhm	25 KOhm	25 KOhm	25 KOhm
CLASS	B+C to E DIN EN 15714 Inching + Modulation			

F.S. **F**ull **S**cale

J4C 20/35/55/85 POSITIONER CONFIGURATION (DPS)

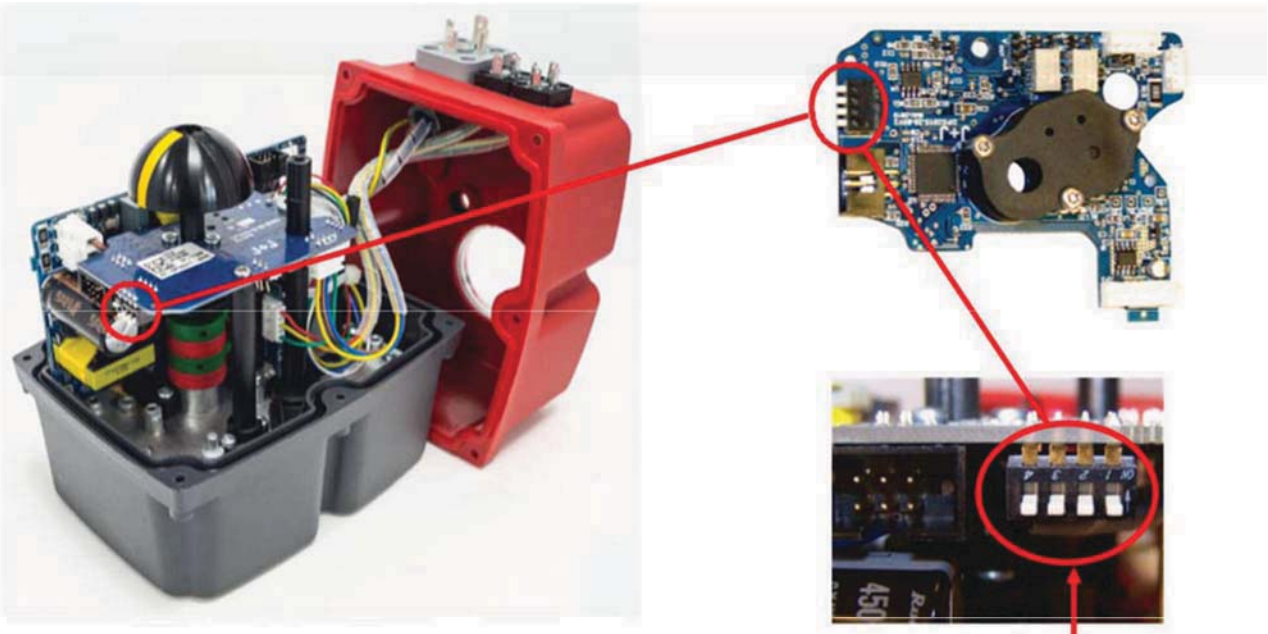

Use the configuration you need by moving the DIPs:
Different possibilities of configuration:

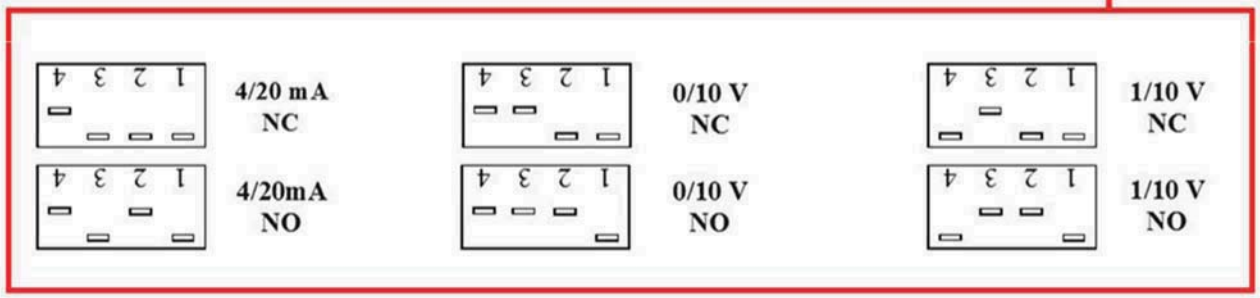

OTHER OPTIONS TO BE SET-UP BY THE MANUFACTURER OR WITH A J4C INTERFACE	
OUTPUT ONLY	4/20 mA, 0/10 V, 0/20 mA, 1/10 V
INPUT & OUTPUT	0/20 mA
MOTOR STOP, WITHOUT INSTUMENTATION	4/20 mA, 0/10 V, 0/20 mA, 1/10 V

J4C 20/35/55/85 POSITIONER SELF-ADJUSTMENT (DPS)

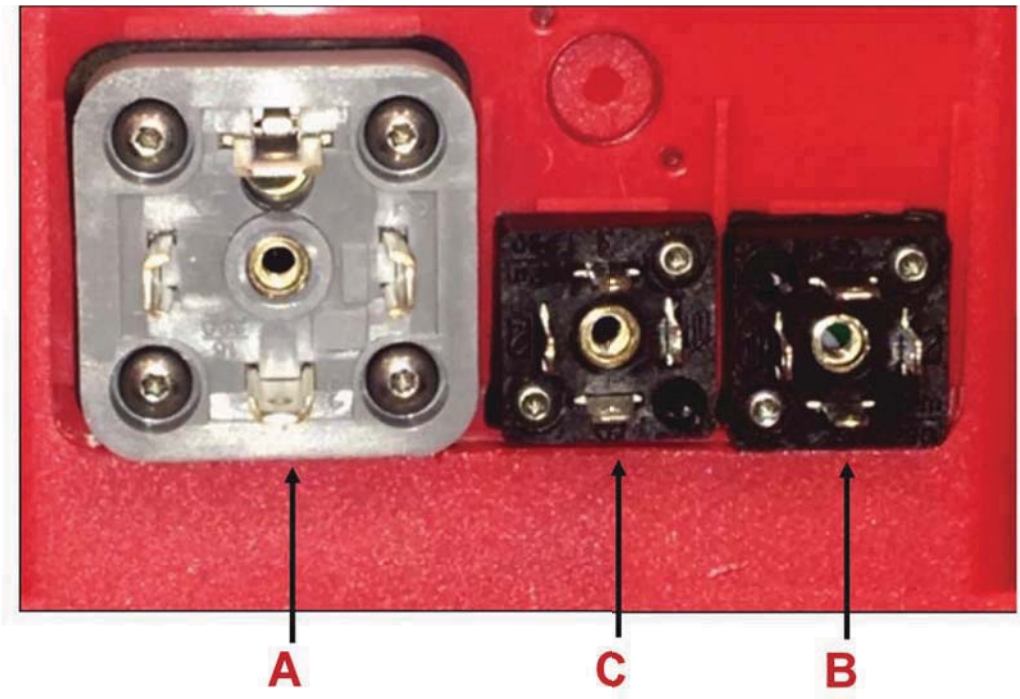

A- Power supply plug.

B- Volt free contact plug.

C- Input / Output signal (4/20mA,0/10V,0/20mA o 1/10V) plug.

1- **C** plug - connect a cable between PIN 1 (on the left side) and PIN Earth (on the bottom).

2- **A** plug - connect:

VAC: PIN1 (neutral) and PIN2 (phase).

VDC: PIN1 (negative) and PIN2 (positive).

*VERY IMPORTANT: BEFORE CONNECTING "A" PLUG TO THE ACTUATOR, CHECK THAT THE VOLTAGE IS THE SAME AS THE ONE SPECIFIED ON THE LABEL (CARTER).

3- **C** plug - disconnect the cable between PIN 1 (on the left side) and PIN Earth (on the bottom).

The actuator will make a complete maneuver and stay in the close position.

The actuator is ready to connect the (4/20mA,0/10V,0/20mA o 1/10V) signal to the **C** plug.

J4C 140/300 POSITIONER INFORMATION (DPS)

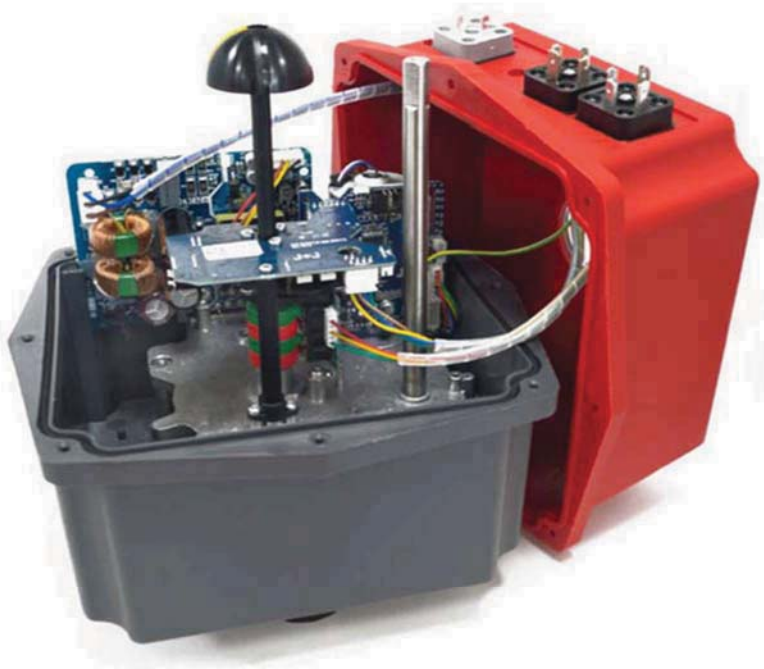

SPECIFICATIONS		
MODEL	**S140-B140**	**S300-B300**
Accuracy	3 % F.S.	3 % F.S.
Linearity	2 % F.S.	2 % F.S.
Hysteresis	3 % F.S.	3 % F.S.
Steps at 4/20mA	Min.150 steps 90°	Min.150 steps 90°
Steps at 0/10V	Min.98 steps 90°	Min.98 steps 90°
Steps at 0/20mA	Min.150 steps 90°	Min.150 steps 90°
Steps at 1/10V	Min.87 steps 90°	Min.87 steps 90°
4/20mA or 0/20mA Input signal impedance	100 Ohm	100 Ohm
0/10V or 1/10V Input signal impedance	25 KOhm	25 KOhm
CLASS	B+C to E DIN EN 15714 Inching + Modulation	

F.S. **F**ull **S**cale

J4C 140/300 POSITIONER CONFIGURATION (DPS)

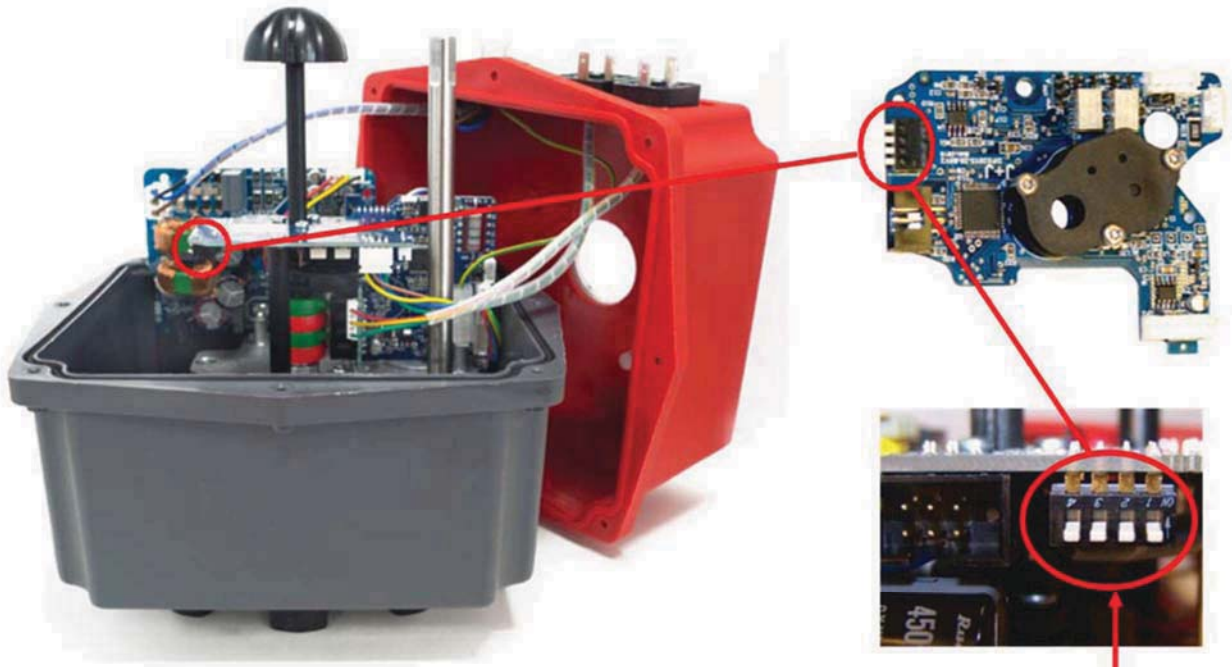

Use the configuration you need by moving the DIPs:
Different possibilities of configuration:

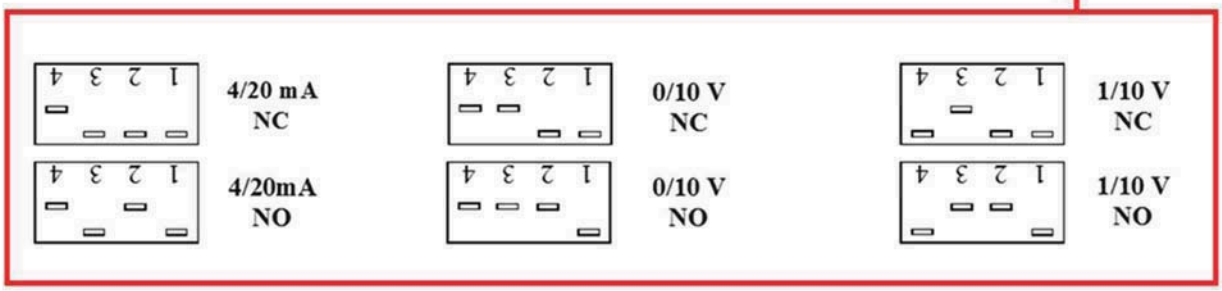

OTHER OPTIONS TO BE SET-UP BY THE MANUFACTURER OR WITH A J4C INTERFACE	
OUTPUT ONLY	4/20 mA, 0/10 V, 0/20 mA, 1/10 V
INPUT & OUTPUT	0/20 mA
MOTOR STOP, WITHOUT INSTUMENTATION	4/20 mA, 0/10 V, 0/20 mA, 1/10 V

J4C 140/300 POSITIONER SELF-ADJUSTMENT (DPS)

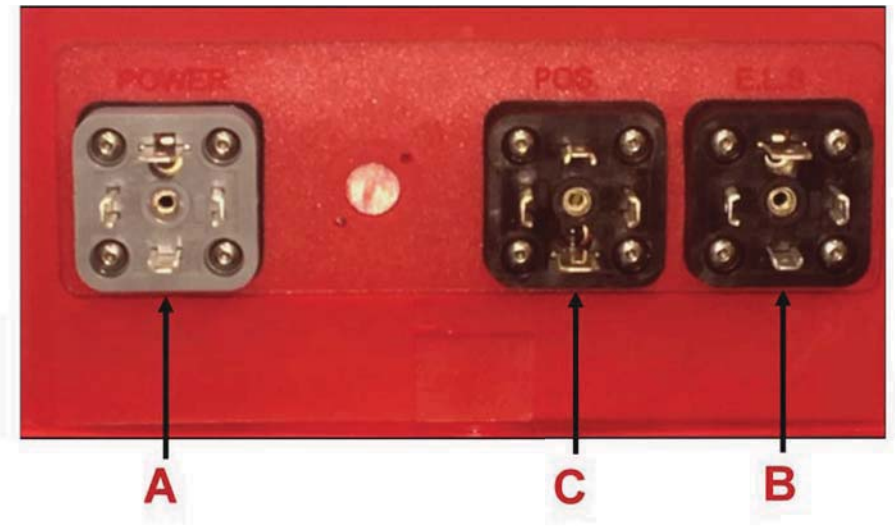

A- Power supply plug.

B- Volt free contact plug.

C- Input / Output signal (4/20mA,0/10V,0/20mA o 1/10V) plug.

1- **C** plug - connect a cable between PIN 1 (on the left side) and PIN Earth (on the bottom).

2- **A** plug - connect:

VAC: PIN1 (neutral) and PIN2 (phase).

VDC: PIN1 (negative) and PIN2 (positive).

*VERY IMPORTANT: BEFORE CONNECTING “A” PLUG TO THE ACTUATOR, CHECK THAT THE VOLTAGE IS THE SAME AS THE ONE SPECIFIED ON THE LABEL (CARTER).

3- **B** plug - disconnect the cable between PIN 1 (on the left side) and PIN Earth (on the bottom).

The actuator will make a complete maneuver and stay in the close position.

The actuator is ready to connect the (4/20mA,0/10V,0/20mA o 1/10V) signal to the **B** plug.

J4C 20/35/55/85 BSR INFORMATION

SPECIFICATIONS				
ACTUATOR MODEL	**S20-B20**	**S35-B35**	**S55-B55**	**S85-B85**
N° Working operation without recharge, with 100% battery charge	10	10	10	10
Recharge time/working operation	15 min	21 min	48 min	58 min
Battery consumption/working operation	2,2 W	3,0 W	6,8 W	8,3 W
Full charge time 100%	28 h	28 h	28 h	28 h
Nominal capacity +/- 5%	2200 mA	2200 mA	2200 mA	2200 mA
NO or NC Features (*)	Jumper	Jumper	Jumper	Jumper
Current/one working operation with battery	10,1 mA	14 mA	31,6 mA	38.6 mA
Battery charge	40 mA/h	40 mA/h	40 mA/h	40 mA/h

J4C 20/35/55/85 BSR CONFIGURATION

CONFIGURATIONS	A	B
PREFERRED POSITION IN CASE OF POWER CUT	(NC) NORMALLY CLOSE	(NO) NORMALLY OPEN

(*) NO or NC Set-Up

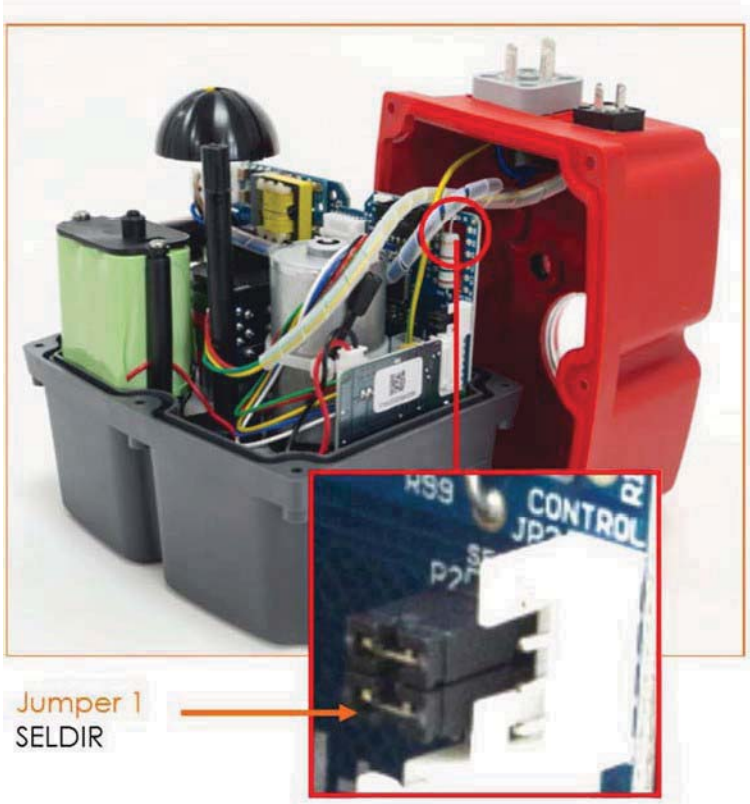

NC Set-Up

NC - If, in case of a power supply failure, we need the actuator go to the CLOSE position, we need to put the jumper 1 on the SELDIR position.

NO Set-Up

NO - If, in case of a power supply failure, we need the actuator go to the OPEN position, be sure that the jumper 1 is not on the SELDIR position.

J4C 140/300 BSR INFORMATION

SPECIFICATIONS		
ACTUATOR MODEL	**S140-B140**	**S300-B300**
N° Working operation without recharge, with 100% battery charge	4	4
Recharge time/working operation	30 min	50 min
Battery consumption/working operation	23 W	23 W
Full charge time 100%	54 h	54 h
Nominal capacity +/- 5%	2200 mA	2200 mA
NO or NC Features (*)	Jumper	Jumper
Current/one working operation with battery	15,1 mA	25,7 mA
Battery charge	40 mA/h	40 mA/h

J4C 140/300 BSR CONFIGURATION

CONFIGURATIONS	A	B
PREFERRED POSITION IN CASE OF POWER CUT	(NC) NORMALLY CLOSE	(NO) NORMALLY OPEN

(*) NO or NC Set-Up

NC Set-Up

NC - If, in case of a power supply failure, we need the actuator go to the CLOSE position, we need to put the jumper 1 on the SELDIR position.

NO Set-Up

NO - If, in case of a power supply failure, we need the actuator go to the OPEN position, be sure that the jumper 1 is not on the SELDIR position.

DPS KIT 20/35/55/85

OUTSIDE BOX

INSIDE BOX

The **DPS** is a device for the J4C electric actuator that turns the actuator into a servo controlled valve positioner.

The **DPS** is a modulus with a microprocessor (CPU) which digitally manages the analogical input and output and compare them with the position of the actuator to establish a uniform relation.

The analogical inputs are sent to the CPU where they are processed for his continuous comparison with the position of the actuator, this allows to obtain a very high sensitivity next to a very high repetitivity of the position (see characteristics).

The **DPS** in communication with the electronic system of the actuator provides an integral management of the motion of the actuator.

SPECIFICATIONS				
MODEL	**S20-B20**	**S35-B35**	**S55-B55**	**S85-B85**
Accuracy	3 % F.S.	3 % F.S.	3 % F.S.	3 % F.S.
Linearity	2 % F.S.	2 % F.S.	2 % F.S.	2 % F.S.
Hysteresis	3 % F.S.	3 % F.S.	3 % F.S.	3 % F.S.
Steps at 4/20mA	Min.150 steps 90°	Min.150 steps 90°	Min.150 steps 90°	Min.150 steps 90°
Steps at 0/10V	Min.98 steps 90°	Min.98 steps 90°	Min.98 steps 90°	Min.98 steps 90°
Steps at 0/20mA	Min.150 steps 90°	Min.150 steps 90°	Min.150 steps 90°	Min.150 steps 90°
Steps at 1/10V	Min.87 steps 90°	Min.87 steps 90°	Min.87 steps 90°	Min.87 steps 90°
4/20mA or 0/20mA Input signal impedance	100 Ohm	100 Ohm	100 Ohm	100 Ohm
0/10V or 1/10V Input signal impedance	25 KOhm	25 KOhm	25 KOhm	25 KOhm
CLASS	B+C to E DIN EN 15714 Inching + Modulation			
WEIGHT	0,600 Kg	0,600 Kg	0,600 Kg	0,600 Kg

F.S. **F**ull **S**cale

DPS KIT 20/35/55/85 INSTRUCTIONS

INSIDE THE KIT BOX

DOCUMENT TO FILL IN

MOUNTING INSTRUCTIONS

PIECES

- **A-** 1 Cover
- **B-** 1 Plastic column
- **C-** 1 DPS positioner PCB
- **D-** 2 Sheet metal Fixing screws
- **E-** 1 Plastic Fixing screws

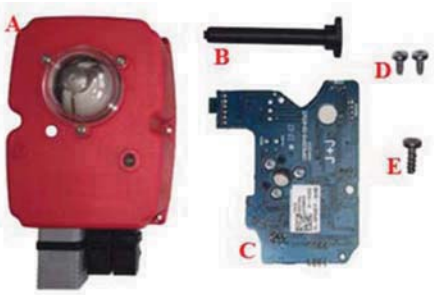

PREPARING THE COVER:

The cover of the kit is for a J4C-20, 35 and 55 models. In case you want to mount a kit on a J4C85, follow the instructions:

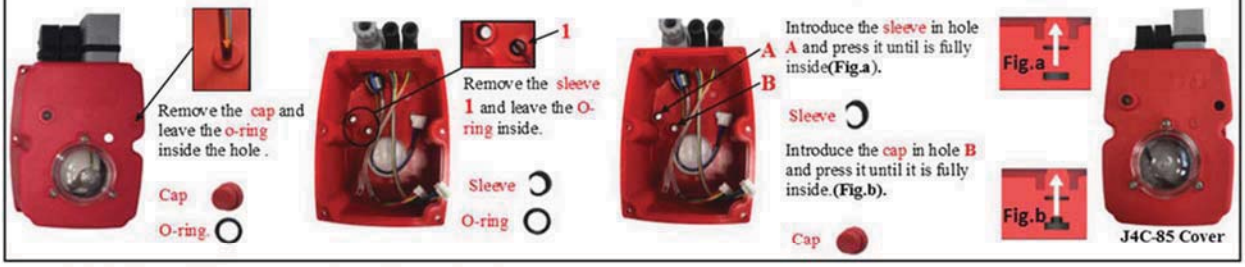

PLEASE READ CAREFULLY BEFORE MOUNTING.

VERY IMPORTANT!!!! PLEASE FOLLOW THE INSTRUCTIONS STEP BY STEP. BEFORE CONNECTING "A" PLUG TO THE ACTUATOR, CHECK THAT THE VOLTAGE IS THE SAME AS THE ONE SPECIFIED ON THE LABEL (CARTER).

TO CONVERT A STANDARD (ON-OFF) J4C ELECTRIC ACTUATOR INTO A MODULATING FUNCTION WITH POSITIONER, PROCEED AS FOLLOWS:

The unit must be disconnected from any electrical power or signal before installing.

1. Remove the screw, which is fixing the hand wheel. **(Fig. 2)**
2. Remove the 6 screws, which are fixing the body to the cover of the actuator **(Fig.3).**
3. Carefully lift the cover **(Fig.4).**
4. Remove the cables (from the cover) connected to the actuator PCB **(Fig.5A,5B and 5C).**
5. Carefully remove the position indicator **(Fig.6).**
6. Fix the plastic column **(B)** on the base plate, by using 2 sheet metal fixing screws **(D)(Fig.7A,7B and 7C).**
7. Take the DPS cover **(A)** and connect its cables, following **(Fig.8A,8B and 8C).**
8. Place the mentioned cables as per **(Fig.9A and 9B).**
9. Mount the DPS positioner PCB **(C),** matching the cleft of the shaft with the key inside the DPS gear **(Fig.10).**
10. Press the DPS positioner PCB **(C)** along the shaft until the **PCB** connector **(JP3)** is plugged in the actuator PCB connector **(JP2) (Fig.11).**
11. Fix the DPS positioner PCB **(C)** to the plastic column **(B)** with the plastic fixing screw **(E) (Fig.12A).**
12. Connect the remaining cable **(A)** to the connector base on the DPS PCB **(C) (Fig. 12B).**
13. Carefully insert the position indicator, matching its inner key with the cleft of the shaft **(Fig.13).**
14. In order to set the actuator up, use the DIPs shown in picture **(Fig.14).**

Put DIP 1 in ON position, connect the grey connector to the power supply, put DIP 1 back to the prior position. Wait until the actuator make a complete maneuver **(Fig. 14A and 14B).**

15. Disconnect the grey connector from the power supply.
16. Use the configuration you need by moving the DIPs, according to the instrumentation signal **(Fig. 15):**

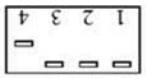

4/20 mA NC

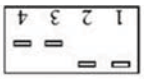

0/10 V NC

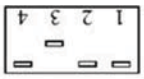

1/10 V NC

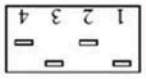

4/20mA NO

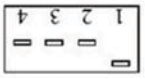

0/10 V NO

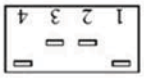

1/10 V NO

17. Carefully mount the cover, minding the cables not to be pressed **(Fig.16).**
18. Fix the cover to the body by using the 6 screws **(Fig.17).**
19. Mount the hand wheel on the shaft and fix it by using the screw **(Fig.18).**
20. Mount the 3 outer connectors together with its rubber joints and fix them to the cover, by using the screws **(Fig.19).**
21. Fill in the document inside the kit, and send it to the fax number or e-mail, shown in the document.

The unit is ready to work.

Outer Set-Up: Only if necessary.

- B plug - Connect a cable between PIN 1 and PIN Earth **(Fig. 20).**
- A plug - Connect it to the power supply.
- B plug, disconnect the cable between PIN 1 and PIN Earth.

The actuator will make a complete maneuver.

Connect B connector to the actuator. The actuator is ready to work.

DPS KIT 20/35/55/85 INSTRUCTIONS

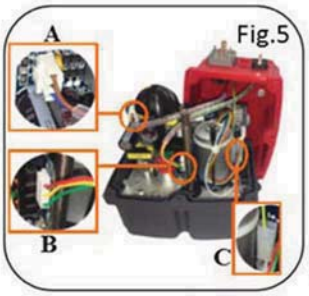

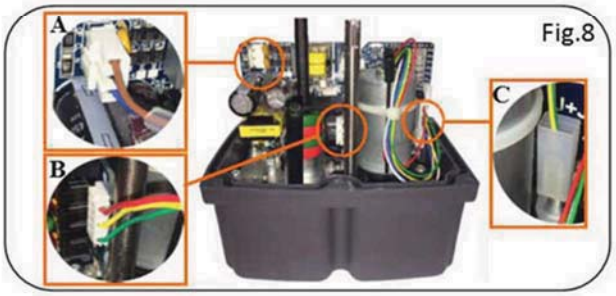

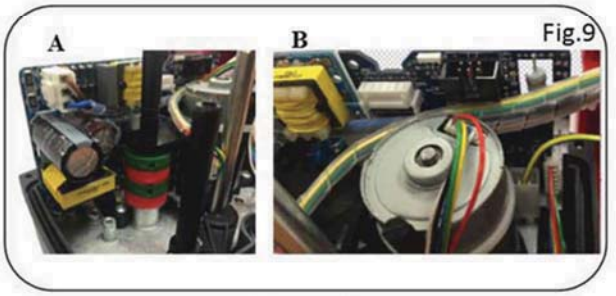

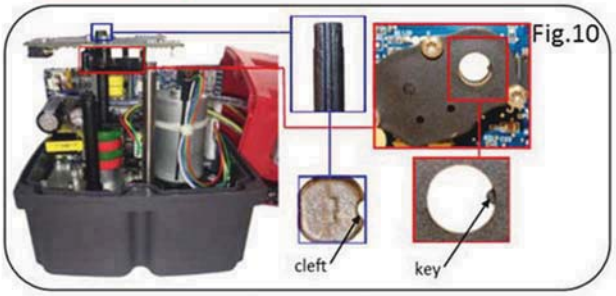

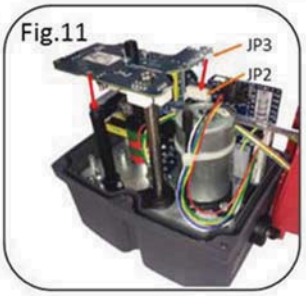

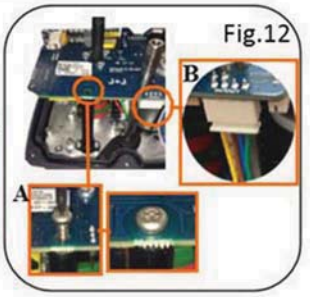

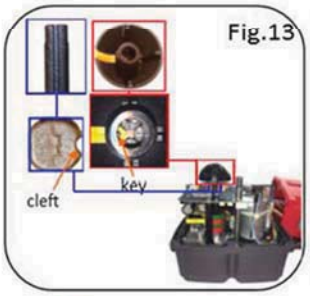

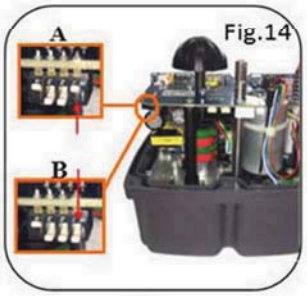

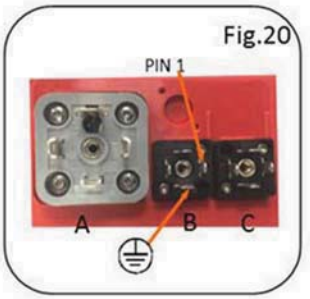

DPS KIT 140/300

OUTSIDE BOX

INSIDE BOX

The **DPS** is a device for the J4C electric actuator that turns the actuator into a servo controlled valve positioner.

The **DPS** is a modulus with a microprocessor (CPU) which digitally manages the analogical input and output and compare them with the position of the actuator to establish a uniform relation.

The analogical inputs are sent to the CPU where they are processed for his continuous comparison with the position of the actuator, this allows to obtain a very high sensitivity next to a very high repetitivity of the position (see characteristics).

The **DPS** in communication with the electronic system of the actuator provides an integral management of the motion of the actuator.

SPECIFICATIONS		
MODEL	**S140-B140**	**S300-B300**
Accuracy	3 % F.S.	3 % F.S.
Linearity	2 % F.S.	2 % F.S.
Hysteresis	3 % F.S.	3 % F.S.
Steps at 4/20mA	Min.150 steps 90°	Min.150 steps 90°
Steps at 0/10V	Min.98 steps 90°	Min.98 steps 90°
Steps at 0/20mA	Min.150 steps 90°	Min.150 steps 90°
Steps at 1/10V	Min.87 steps 90°	Min.87 steps 90°
4/20mA or 0/20mA Input signal impedance	100 Ohm	100 Ohm
0/10V or 1/10V Input signal impedance	25 KOhm	25 KOhm
CLASS	B+C to E DIN EN 15714 Inching + Modulation	
WEIGHT	1 Kg	1 Kg

F.S. **F**ull **S**cale

DPS KIT 140/300 INSTRUCTIONS

INSIDE THE KIT BOX

DOCUMENT TO FILL IN

MOUNTING INSTRUCTIONS

PIECES

- **A-** 1 Cover
- **B-** 1 Plastic column
- **C-** 1 DPS positioner PCB
- **D-** 2 Sheet metal Fixing screws
- **E-** 1 Plastic Fixing screws
- **F-** 1 Schematic diagram label

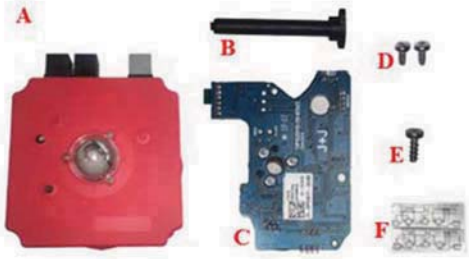

PLEASE READ CAREFULLY BEFORE MOUNTING.

VERY IMPORTANT!!!! PLEASE FOLLOW THE INSTRUCTIONS STEP BY STEP. BEFORE CONNECTING "A" PLUG TO THE ACTUATOR, CHECK THAT THE VOLTAGE IS THE SAME AS THE ONE SPECIFIED ON THE LABEL (CARTER).

TO CONVERT A STANDARD (ON-OFF) J4C ELECTRIC ACTUATOR INTO A MODULATING FUNCTION WITH POSITIONER, PROCEED AS FOLLOWS:

The unit must be disconnected from any electrical power or signal before installing.

1. Remove the screw, which is fixing the hand wheel. **(Fig.2A and 2B)**
2. Remove the 8 screws, which are fixing the body to the cover of the actuator **(Fig.3).**
3. Carefully lift the cover **(Fig.4).**
4. Remove the cables (from the cover) connected to the actuator PCB **(Fig.5A, 5B & 5C).**
5. Carefully remove the position indicator **(Fig.6).**
6. Fix the plastic column **(B)** on the base plate, by using 2 sheet metal fixing screws **(D) (Fig.7A,7B & 7C).**
7. Take the DPS cover **(A)** and connect its cables, following **(Fig.8A, 8B & 8C).**
8. Mount the DPS positioner PCB inside the kit **(C),** matching the cleft of the shaft with the key inside the DPS gear **(Fig.9).**
9. Press the DPS positioner PCB **(C)** along the shaft until the **PCB** connector **(JP3)** is plugged in the actuator PCB connector **(JP2) (Fig.10).**
10. Fix the DPS positioner PCB **(C)** to the plastic column **(B)** with the plastic fixing screw **(E) (Fig.11A).**
11. Connect the remaining cable from the kit cover **(A)** to the connector base on the DPS PCB **(C) (Fig.11B).**
12. Carefully insert the position indicator, matching its inner key with the cleft of the shaft **(Fig.12).**
13. In order to set the actuator up, use the DIPs shown in picture **(Fig.13).**
    Put DIP 1 in ON position, connect the grey connector to the power supply, put DIP 1 back to the prior position. Wait until the actuator make a complete maneuver **(Fig.13A and 13B).**
14. Disconnect the grey connector from the power supply.
15. Use the configuration you need by moving the DIPs, according to the instrumentation signal **(Fig.14):**

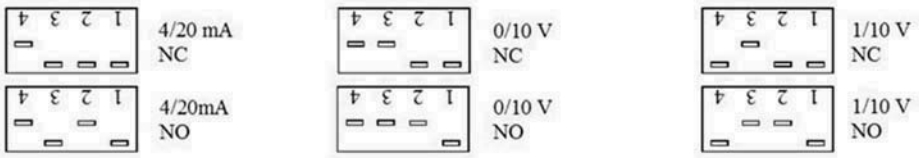

16. Carefully mount the cover, minding the cables not to be pressed **(Fig.15).**
17. Fix the cover to the body by using the 8 screws **(Fig.16).**
18. Mount the hand wheel on the shaft and fix it by using the screw **(Fig.17).**
19. Mount the 3 outer connectors together with its rubber joints and fix them to the cover, by using the screws **(Fig.18).**
20. Remove the wiring label from the actuator and replace it by the one inside the kit box **(F).**
21. Fill in the document inside the kit, and send it to the fax number or e-mail, shown in the document.

The actuator is ready to work.

Outer Set-Up: Only if necessary.

- B plug - Connect a cable between PIN 1 and PIN Earth **(Fig.19).**
- A plug - Connect it to the power supply.
- B plug, disconnect the cable between PIN 1 and PIN Earth.

The actuator will make a complete maneuver.

Connect and fix the B outer connector to the actuator. The actuator is ready to work.

DPS KIT 140/300 INSTRUCTIONS

BSR KIT 20/35/55/85

OUTSIDE BOX

INSIDE BOX

The BSR safety block system is an automatism that, when coupled to the J4C multi voltage electric actuators, lets the valve situate in a preferable position NC or NO, when there is a power supply failure. Inside of the housing there are a BSR print circuit board and a battery pack, which is kept in continuous charge.

In case of the valve is not in the preferable position and there is a power supply cut, the BSR system returns the valve back to the preferable position by means of the batteries tension, operating as a "single acting" actuator.

SPECIFICATIONS				
ACTUATOR MODEL	**S20-B20**	**S35-B35**	**S55-B55**	**S85-B85**
N° Working operation without recharge, with 100% battery charge	10	10	10	10
Recharge time/working operation	15 min	21 min	48 min	58 min
Battery consumption/working operation	2,2 W	3,0 W	6,8 W	8,3 W
Full charge time 100%	28 h	28 h	28 h	28 h
Nominal capacity +/- 5%	2200 mA	2200 mA	2200 mA	2200 mA
NO or NC Features (*)	Jumper	Jumper	Jumper	Jumper
Current/one working operation with battery	10,1 mA	14 mA	31,6 mA	38.6 mA
Battery charge	40 mA/h	40 mA/h	40 mA/h	40 mA/h
Weight	0,27 Kg	0,27 Kg	0,27 Kg	0,27 Kg

BSR KIT 20/35/55/85 INSTRUCTIONS

VERY IMPORTANT:

PLEASE, FOLLOW THESE INSTRUCTIONS STEP BY STEP.IF THE CONNECTOR OF THE BATTERY PACK IS PLUGED TO THE "BSR" PCB, BEFORE ARRIVING TO POINT 7, THE PCB COULD BE DAMAGED.

INSIDE THE KIT BOX

DOCUMENT TO FILL IN

MOUNTING INSTRUCTIONS

KIT COMPONENTS

- **A** 1 BSR PCB.
- **B** 1 Lower battery support.
- **C** 1 Battery pack.
- **D** 1 Upper battery support.
- **E** 3 Sheet metal Fixing screws
- **F** 2 Plastic Fixing screws

1. Remove the hand wheel screws and take it off. **(Fig. 1).**
2. Remove the 6 screws between the cover and the body of the actuator.**(Fig.2).**
3. Carefully remove the cover, in order to install the kit. **(Fig.3).**
4. Take the BSR PCB **(A)** from the KIT and connect it to the actuator PCB, by using the connector Shown in picture. See **(Fig.4).** Fix it to the actuator metal plate, by using the Sheet metal fixing screw **(E).** See **(Fig.5).**
5. Put the lower battery support **(B).** See **(Fig.6A).** Fix it by using 2 Sheet metal fixing screws **(E) (Fig.6B & 6C).**
6. Place the battery pack **(C)** on the lower battery support **(B) (Fig.7B).** The battery cables should remain on the bottom part. Put the cables, as shown in the picture **(Fig.7A).**
7. Connect the battery cables to the BSR PCB **(A),** as per **(Fig.7C).**
8. Place the upper battery support **(D) (Fig.8A)** and fix it to the columns of the lower battery support **(B),** by using the Plastic fixing screws **(F) (Fig.8B & 8C).**
9. BSR Configuration NO or NC **(Fig.9):**
   NC (normally close) SELDIR jumper ON.
   NO (normally open) SELDIR jumper OFF.
10. Carefully replace the cover and be sure that the joint is correctly lodged in its place. See **(Fig.10).** Be sure that any cable is not trapped between the cover and the body.
11. Fix the 6 screws, between the cover and the body. See **(Fig.11).**
12. Reassemble the hand wheel and fix it with the screws. See **(Fig.12).**
13. Fill in the blanks of the document inside the BSR KIT and send it back to the supplier, via fax or mail.

Now, the actuator is ready to work.

We strongly recommend to put the power on, send the actuator to an intermediate position and check that , after putting the power off, the actuator goes to the pervious set-up position (NC or NO).

BSR KIT 20/35/55/85 INSTRUCTIONS

Fig.1

Fig.2

Fig.3

Fig.4

Fig.5

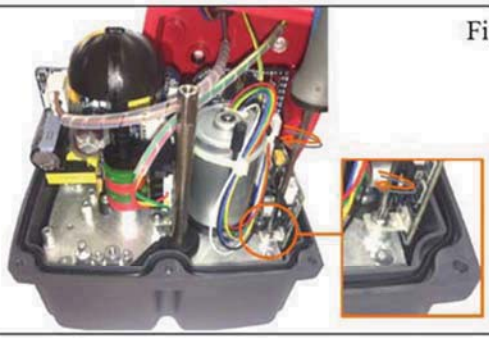

Fig.6

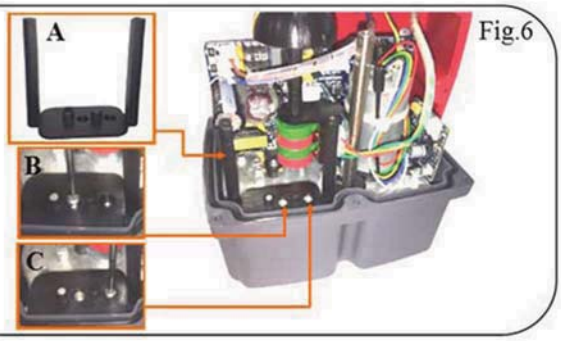

Fig.7

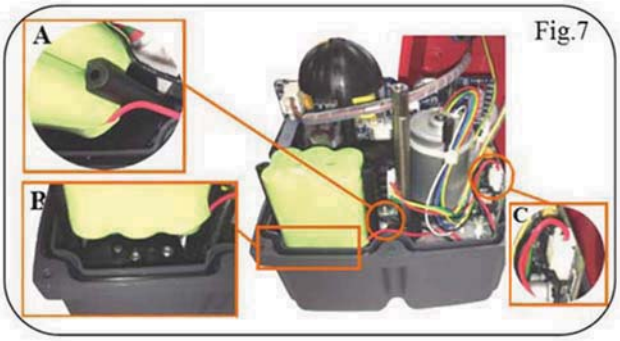

Fig.8

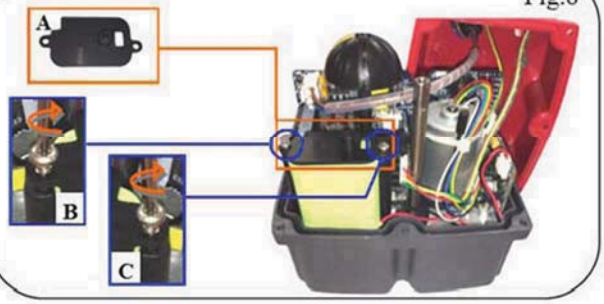

Fig.9

Jumper **SELDIR**

Fig.10

Fig.11

Fig.12

BSR KIT 140/300

OUTSIDE BOX

INSIDE BOX

The BSR safety block system is an automatism that, when coupled to the J4C multi voltage electric actuators, lets the valve situate in a preferable position NC or NO, when there is a power supply failure. Inside of the housing there are a BSR print circuit board and a battery pack, which is kept in continuous charge.

In case of the valve is not in the preferable position and there is a power supply cut, the BSR system returns the valve back to the preferable position by means of the batteries tension, operating as a "single acting" actuator.

SPECIFICATIONS		
ACTUATOR MODEL	**S140-B140**	**S300-B300**
N° Working operation without recharge, with 100% battery charge	4	4
Recharge time/working operation	30 min	50 min
Battery consumption/working operation	23 W	23 W
Full charge time 100%	54 h	54 h
Nominal capacity +/- 5%	2200 mA	2200 mA
NO or NC Features (*)	Jumper	Jumper
Current/one working operation with battery	15,1 mA	25,7 mA
Battery charge	40 mA/h	40 mA/h
Weight	0,375 Kg	0,375 Kg

BSR KIT 140/300 INSTRUCTIONS

J4C 140/300 BSR KIT - MOUNTING INSTRUCTIONS V001

VERY IMPORTANT:

PLEASE, FOLLOW THESE INSTRUCTIONS STEP BY STEP.IF THE CONNECTOR OF THE BATTERY PACK IS PLUGED TO THE "BSR" PCB, BEFORE ARRIVING TO POINT 4, THE PCB COULD BE DAMAGED.

INSIDE THE KIT BOX

DOCUMENT TO FILL IN

MOUNTING INSTRUCTIONS

KIT COMPONENTS

- **A** 1 BSR PCB.
- **B** 2 Battery support.
- **C** 2 Battery pack.
- **D** 3 Sheet metal Fixing screws
- **E** 1 Plastic clamp

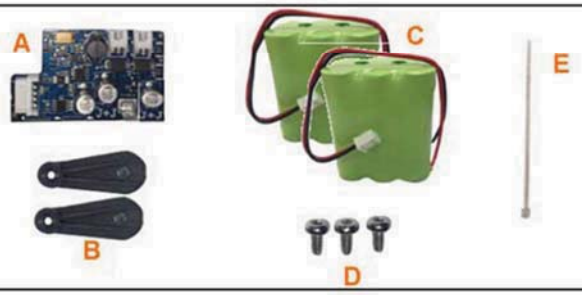

1. Remove the hand wheel screw and take it off. **(Fig. 1A & 1B).**
2. Remove the 8 screws between the cover and the body of the actuator.**(Fig.2).**
3. Carefully remove the cover, in order to install the kit. **(Fig.3).**
4. Take the BSR PCB **(A)** from the KIT and connect it to the actuator PCB, by using the connector shown in the picture. See **(Fig.4).** Fix it to the actuator metal plate, by using the Sheet metal fixing screw **(D).** See **(Fig.5).**
5. Place the 2 battery packs **(C)** as per picture **(Fig.6A & 6B).**
6. Place the battery supports **(B)**, as per picture **(Fig. 7A & 7B).**
7. Fix the battery supports (B), with the sheet metal fixing screws **(D) (Fig. 8A & 8B).**
8. Connect the battery cables to the BSR PCB **(A),** as per **(Fig.8C).**
9. Put both battery cables **(C)** together with the plastic clamp **(E) (Fig. 8D).** Cut the remaining part of the plastic clamp **(E).**
10. BSR Configuration NO or NC **(Fig.9):**
    NC (normally close) SELDIR jumper ON.
    NO (normally open) SELDIR jumper OFF.
11. Carefully replace the cover and be sure that the joint is correctly lodged in its place. See **(Fig.10).** Be sure that any cable is not trapped between the cover and the body.
12. Fix the 8 screws, between the cover and the body. See **(Fig.11).**
13. Reassemble the hand wheel and fix it with the screw. See **(Fig.12).**
14. Fill in the blanks of the document inside the BSR KIT and send it back to the supplier, via fax or mail. Now, the actuator is ready to work.

We strongly recommend to put the power on, send the actuator to an intermediate position and check that , after putting the power off, the actuator goes to the pervious set-up position (NC or NO).

BSR KIT 140/300 INSTRUCTIONS

Fig.1

Fig.2

Fig.3

Fig.4

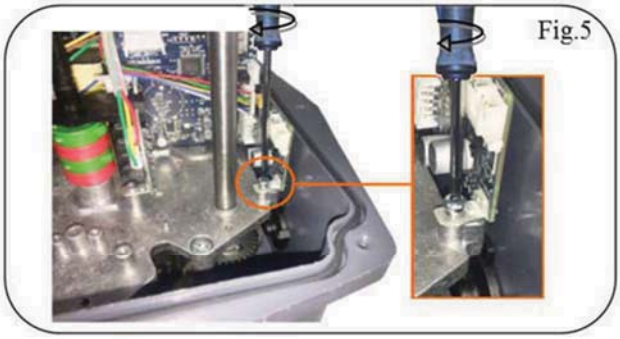
Fig.5

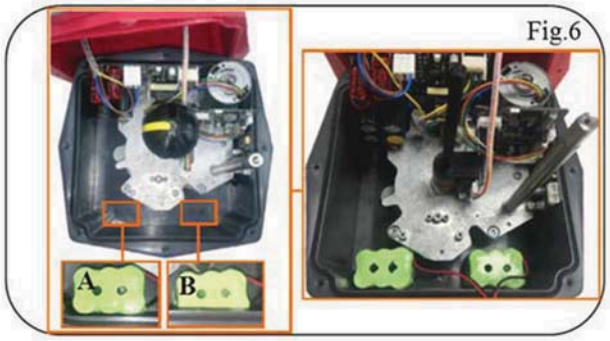

Fig.6

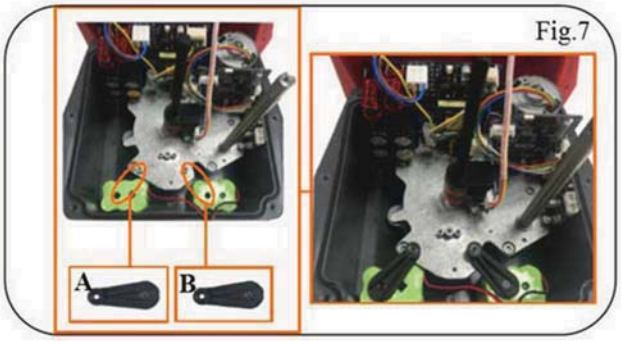

Fig.7

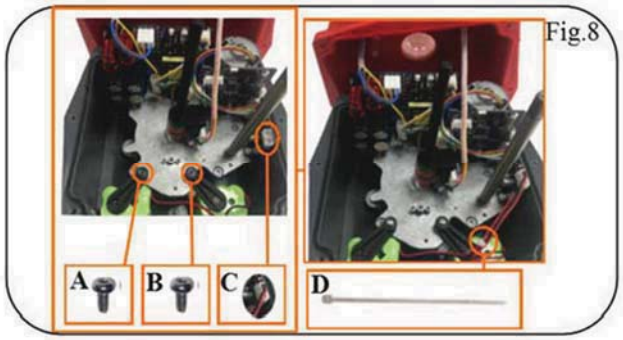

Fig.8

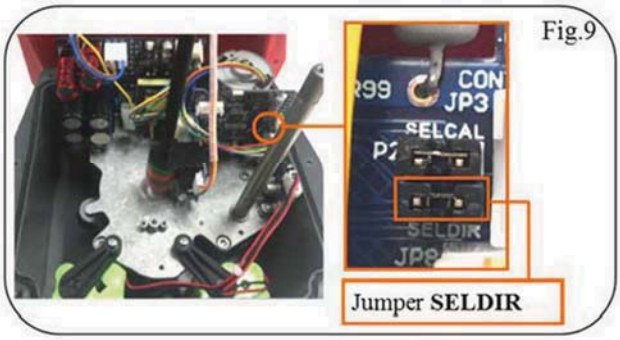

Fig.9

Fig.10

Fig.11

Fig.12

GUARANTEE

We are warranted against defects of workmanship or assembly as follows:

J4C S/B Series: up to 60.000 working cycles or 3 years from their shipment date. Working conditions of a 75% of duty. Max number of 50 limiter function activations, within 3 years of the warranty period.

OUR WARRANTY INCLUDES SOLELY AND EXCLUSIVELY THE REPAIR OR REPLACEMENT OF THE DEFECTIVE PARTS IN OUR WORKSHOP OR IN THE PLACEMENT OF THE INSTALLATION, AND DOES NOT COVER INDEMNIFICATIONS OR OTHER EXPENSES.

The warranty will be void if the device has been open, if the defects are the result of the misuse or if our products have been handled, repaired or modified outside our workshop or have been installed with materials or by methods not in accordance with our STANDARDS.
The party alleging the existence of a defect of workmanship shall accredit the suitable use of the product and, if appropriate the correct installation of the same.

The expenses of the return and reshipment of the defective materials will be for the account of the buyer.

General advise:

Transportation:

The transport to the installation location should always take place in a fixed packaging. Do not carry the actuator on the hand wheel and do not attach any hoists to the hand wheel.

Entry control:

Check directly after delivery the actuator for possible damages in transit and faults.
Don´t leave any parts in the packaging. Check on the bases of the delivery note and the type label at the actuator whether the delivered goods correspond to your order.

Storage:

Store the actuators in well ventilated, dry rooms. They must be protected against humidity, dust, dirt, temperature change and solar radiation. If a storage is not possible under the described conditions, the built-in control room heater has to be wired actively. For this purpose, the actuator must be connected to the mains voltage corresponding to the voltage indicated on the nameplate.

Damages in transit:

Claims for damages related to shipping damage are immediately reported to the delivering transport company. The transport packaging should be kept. Customize a damage report for return (due to damage / repairs). Damage claims can be made only as asserted.
Return the delivery, after agreement, back to us, if possible with their original packaging und and completed return form. Send us the document via fax or mail. After our approval send you the goods together with the return document and return material authorization number to our service department.

Safety notes:

First check the following circumstances:

-Does the actuator the required version (torque, protection, voltage, swivel angle, etc.).
-Does the wiring acc. to the voltage (see diagram/type label).
-Is it possible to adjust the valve on the manual override.
-Switch from AUTO to MAN, move the handwheel/ handlever to synchronize the transmission then exit the adjustment path manually and turn back to the starting position. Then switch from MAN to AUTO and move the handlever/ hand wheel onesmore.
These safety instructions are to be considered by any person concerned with the operation, maintenance or repair of the actuators. The proper and safe operation requires proper transport, proper storage, mounting and careful operation.
-Maintenance and repair work may only be performed by qualified personnel. When wiring electrical equipment the applicable VDE and EVU regulations are observed.
-Electrical protection measures (grounding resistance, etc.) are to be checked.
-When working on the actuator or connected to these devices and system components, the supply voltage must be switched off.
-Perform the installation, repair work in compliance with the applicable statutory and professional safety and accident prevention regulations!
-The safety aspects are always depending on the circumstances and the timing of the assembly, disassembly, adjustment, commissioning and are therefore always to adapt to the application.

Mounting:

-Switch off all equipment, machinery, equipment which is affected by the installation or repair and disconnect the equipment, machinery, plant, where appropriate, from the net!
Check whether the plant shut-down causes potential danger ! Inform the shift foreman, safety engineer or the conductor immediately to prevent a fault in the actuator, by run out or spilling of liquids or leakage of gases, with suitable measures!
-Check the correct function of the safety devices (e.g. Emergency-Stop-Switch/Safety valves etc.) !
-Provide for adequate vibration isolation! Vibrations can cause damage depending on the type or resonance with the actuator components. Be particularly sensitive to wearing parts such as potentiometers, motors or electronic components. The use in vibration-prone environments has to be coordinated with the actuator manufacturer.
-When installed in wet environments and in areas with significant temperature changes in each case the built-in control room heater has to be kept actively after the actuator is stopping in the end position.
-Fireplaces, stoves, direct sunlight and other heat sources can emit large amounts of energy. This heat radiation should be avoided by appropriate shielding of the actuator.

Setting and Commissioning:

-Make sure that the starting or the test settings on the actuator, no potential hazards to personnel or the environment.
-If necessary, set up warning signs, so that unintentional operation is prevented.
-During commissioning of the electric part turn actuator manually or electrically, the position of an attached valve is changed. This allows the flow of gases, vapours, liquids, etc. are enabled or interrupted.
-Check that the valve is actually closed 100 percent when the controller signals the corresponding position!
-Avoid being trapped by suitable measures that by moving parts limbs.
-The actuator may be used only for the purpose it was designed.
-Open the electric rotary actuator only so far as it is described in this documentation.
-Before mounting the actuator is the ease of movement of the actuator to consider.
-All cables that are to be connected to the supply, before the electrical installation.
-Upon completion of maintenance or repair, check the correct function and possibly adhering to the target angular position of the actuator and the function of the adjusted to the angular positions switch.
-To clean the housing, do not use abrasive, corrosive or flammable cleaners or high-pressure cleaning equipment.

Installation:

Environment:

The actuator must be protected against outdoor heating by solar radiation, freezing, UV radiation (e.g. shelter / roof).To avoid condensation, the control room heater must be active, i.e. the supply voltage must be applied continuously.
Cabling and connector seals should be checked for proper fit and tightness. In cold or hot liquids above or below the temperature range (-20°C to 70°C), a temperature derivative should be provided.
In applications where vibrations are expected, e.g. compressors, motors, line strokes, in the pipeline pipe compensators have to be provided.

Mounting:

According to the use- and safety- requirements, the part of the plant design or operator has to require inspection- and maintenance- cycles as well as instructions and documentations on the operating characteristics of the actuators. It should be noted that the manual override is accessible and the position indicator is visible. Depending on the version the actuator is pre-adjusted according to the imprint. You may adjust the swivel angle (see "position adjustment"). The assembly of the actuator is limited to the mechanical assembly in that equipment / machinery / plant part, which contains the actuating device and to the terminal of the actuator to the motor actuator- and control lines.
To the following description we assume that you have read the previous chapter carefully. Pay attention to the assembly and disassembly instructions and warning notes written in the chapter on safety advise.

Maintenance:

The actuators require no maintenance. A control test to function according to the security requirements of the plant system is recommended, especially for seldom-used actuators. After commissioning, the connection of the actuator with the valve should be checked after some time. Here also the ease of the assembled valve is to be tested. Generally attention must be paid to tight fit of the lid and the tightness of the cable gland. Unused connectors must be covered accordingly. After long plant shut-downs valves can be extremely stiff. A manual actuation (without any actuator) might be necessary before restarting (notice instructions of the valve suppliers).

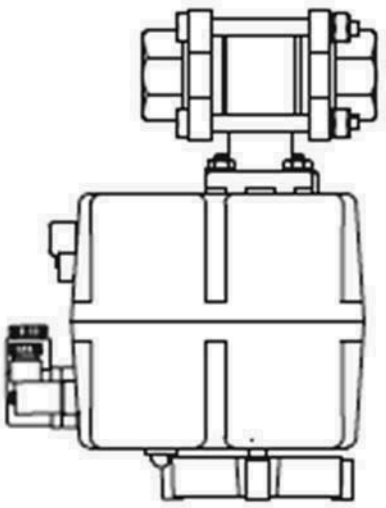

not permissible installation

Installation:

Mounting of the valve

The valves shall be designed according to interface DIN3337/IS05211. All alignment of actuator and valve shaft must be ensured.
The technical requirements must comply with the performance of the actuators. Blocking the output shaft or the hand controls may result in damage to the actuator.

Insertion depth of the actuator wave socket

The insertion depth of the valves square socket to be assembled to the actuators double square socket should be always less than or equal to the insertion depth d actuator.
As a rule of thumb for planners of octagon and adaption is at least:
Insertion depth = size of the specified double squares
Should this not be considered, it may cause a malfunction or even damage of the actuator.

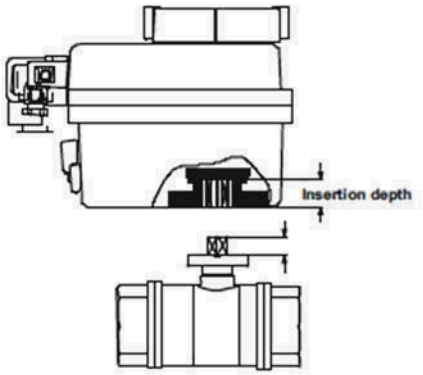

Recommendatlon:

If possible, use headless screws with nuts and washers for the construction of the valve, so raising the flange is prevented. The use of threaded pins depends on the valve flange. Details can be found in the valve data

Advantages of using threaded pins:

fast centring of the valve and actuator
easier removal of the valve and actuator in the place of assembly, e.g. during maintenance, replacement of components

Installation:

Flange hole thread:

Flange	F03	F04	F05	F07	F10	F12	Stecker	Gehäuse
Screw	M5	M6	M6	M8	M10	M12		
Mounting torque	5,1 Nm		8,8 Nm	21,5 Nm	44 Nm	65 Nm	0,5 Nm	2,6 Nm

Required mounting material:

Material for the direct actuator design

With screws:
- 4 screws
- 4 washers

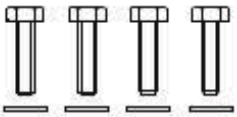

Alternatively with headless screws:
- 4 headless screws
- 4 washers
- 4 nuts

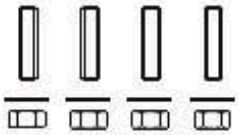

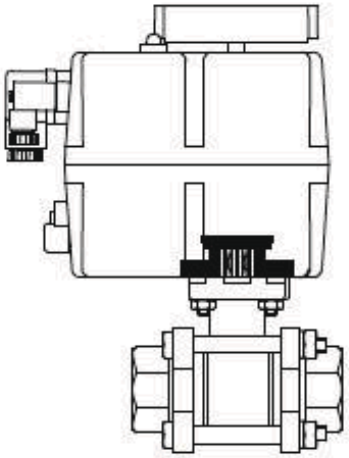

Direct mounting

Material for Assembly - actuator on valve bracket and adapter

- a bracket
- adapter

with screws:
- 8 screws
- 8 washers
- 4 nuts

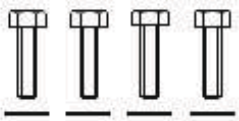

alternatively with headless screws
- 8 headless screws
- 12 nuts
- 12 spring washer

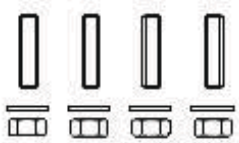

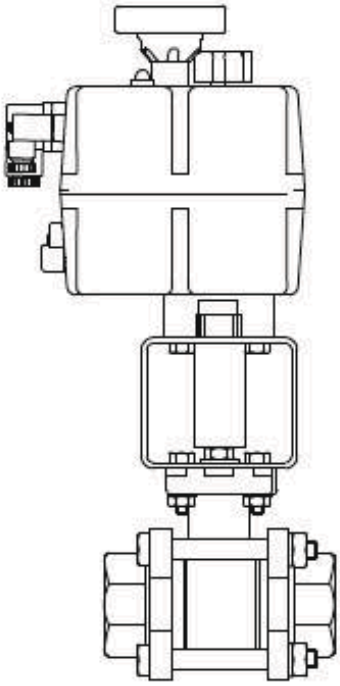

Assembling with bracket and adapter

FAQ:

The actuator moves and then stops. The operating LED flashes red or green (see status LED).
»» High torque on the valve due to not removed end stops or solids in the valve. Valve must be checked!
»» Model size of the actuator is too small.

The actuator is in position „open" but the valve is closed or half opened.
»» Actuator is mounted on the valve with a wrong angle. Dismount, turn the actuator in manual mode to correct angle, mount it.

The limit switches for end position feedback do not work.
»» Check the wiring. Check the adjustment of the cams so that they trigger shortly before reaching the end position.
»» In load-free interrogation of the limit switch, soot is formed inside. Actuator with gold contact switches are to be used.

The actuator moves, but the valve does not.
»» The connection between actuator and valve is damaged or incorrectly dimensioned.

For other malfunctions, please contact our technical service department.